City of St. Helena
Planning Commission
Regular Meeting
Tuesday, February 7, 2017 @ 6:00 PM
Vintage Hall Board Room - Second Floor
465 Main Street, St. Helena

PLEASE NOTE: Any person who wishes to speak regarding an item on the agenda or make a comment under the "Oral Communication" portion of the agenda may do so, but please observe the time limit of three minutes.

Page

1. PLEDGE OF ALLEGIANCE

2. CALL TO ORDER AND ROLL CALL
Chairperson: Grace Kistner
Vice Chair: Vacant
Commissioners: Sarah Parker, Bobbi Monnette, Tracy Sweeney
City staff present at the meeting will be noted in the minutes.

3. PUBLIC FORUM:
This is an opportunity for the public to address the Commission on items of interest to the public that are NOT listed on t he agenda. Because of restrictions imposed by the Brown Act, the Commission may not engage in discussion nor take action on matters not described on the agenda. **Please observe the time limit of three minutes.**

4. CONSENT ITEMS
Members of the Commission or the public may ask that any items be considered individually for purposes of considering alternative action, for extended discussion, or for public comment. Unless that is done, one motion may be used to adopt all recommended actions. (Roll Call Vote)

4.1. Approval of Minutes November 15, 2016 and December 20, 2016. 7 - 17
COMMISSION MINUTES 11-15-16
COMMISSION MINUTES 12-20-16

4.2. **File Number:** PL16-070 19 - 40
Location of Property:1330 Madrona Avenue
Project Description: Applicant, Ivan Lukrich, on behalf of property owners, Joyce Hoshall, is requesting Design Review approval to perform minor exterior modifications and construct a new master suite at the existing residence at 1330 Madrona Avenue.

CEQA Determination: The project is exempt from the requirements of CEQA pursuant to Section 15301, which exempts minor alterations and additions to existing private structures
Prepared By: Lilly Bianco, Contract Planner
Recommendation: Staff recommends that the Planning Commission adopt a resolution finding that:

1. The project is exempt from the requirements of CEQA pursuant to CEQA Section 15301 as a minor alteration and addition to an existing

structure.

2. Accepts the required findings and approves the design review exemption for the modifications to 1330 Madrona Avenue.

Staff Report. 1330 Madrona DRE
Attachment 1. 1330 Madrona Resolution
Attachment 2. 1330 Madrona APN Map (2)
Attachment 3. 1330 Madrona Aerial View
Attachment 4. 1330 Madrona Project Plans
Attachment 5. 1330 Madrona Water neutrality

4.3. **File Number:** PL16-084 41 - 59

Location of Property: 1425 Oak Avenue

Project Description: Request from the United Methodist Church for approval of a Design Review Exemption to allow the construction of a 400-square foot, free standing shade structure to serve the Sun and Stars Montessori School at 1425 Oak Avenue.

CEQA Determination: Staff finds that the project qualifies for a Class 3 Categorical Exemption under Section 15303 of the California Environmental Quality Act.

Prepared By: Noah Housh, Planning Director

Recommendation: It is recommended by the Planning and Community Improvement Department that the Planning Commission:

1. Determine that the project is exempt from the requirements of CEQA as a Class 3 Categorical Exemption under Section 15303 of CEQA.

2. Accept the required findings and approve the Design Review Exemption for the proposed installation of a 12-foot tall, 400-square foot cloth shade structure to cover the play area at the rear of the building at 1425 Oak Avenue.

Staff Report. 1425 Oak
Attachment 1. Resolution 1425 Oak DR Exemption
Attachment 2. 1425 Oak WRITTEN STATEMENT
Attachment 3. 1425 Oak Shade Structrue Plans
Attachment 3a. 1425 Oak PHOTOS
Attachment 4. 1425 Oak Sun and Stars Letter-9-15-16

4.4. **File Number:** PL16-099 61 - 67

Location of Property: 1475 Main Street

Project Description: Request by Julie Spencer on behalf of the Rianda House for sign permit approval in order to place a new informational monument sign on the Rianda House property located at 1475 Main Street in the Business and Professional Office (BPO) district.

CEQA Determination: This project is exempt from the requirements of CEQA pursuant to Section 15311 of the CEQA Guidelines, which exempts on-premise business signs.

Prepared By: Aaron Hecock, Senior Planner

Recommendation: Staff feels the sign is well designed and well placed and is in support of the application. Therefore, staff recommends that the Planning Commission:

1. Determine that the signs are exempt from the requirements of CEQA pursuant to Section 15311, Class 11(a) of the CEQA Guidelines which exempts on-premise business signs; and

2. Approve the request for a Sign Permit in order to place a new, illuminated, monument sign on the property located at 1475 Main Street.

Staff Report. 1475 Main
Attachment 1. 1475 Main St. Resolution
Attachment 2. 1475 Sign Plan

5. PUBLIC HEARINGS

5.1. **File Number:** PL16-080 69 - 126
Location of Property:1405 Adams Street
Project Description: Applicant, Lauren Gaffney of Wade Design Architects, is requesting Design Review Approval on behalf of property owners, George Duran and Joseph Pon, to construct a new single family residence with attached accessory dwelling, swimming pool, landscaping, and other appurtenant improvements at 1405 Adams Street.

CEQA Determination: The project is exempt from the requirements of CEQA pursuant to Section 15303, which exempts the construction single-family residences, amongst other things.
Prepared By: Lilly Bianco, Contract Planner
Recommendation: Staff finds that the proposed configuration of the site, the overall design elements and proposed materials/finishes are in character with the neighborhood and the community in general. Because of this staff concludes that design review findings can be made and recommends that the Planning Commission:

1. Determine that the project is exempt from the requirements of CEQA, pursuant to Section 15303, which exempts the construction single-family residences.

2. Accept the required findings and grant design review approval for the Adams Street Residence at 1405 Adams Street.

Staff Report. 1405 Adams St.
Attachment 1. 1405 Adams Resolution
Attachment 2. 1405 Adams APN Map
Attachment 3. 1405 Adams Aerial view
Attachment 4. 1405 Adams Project Plans
Attachment 5. 1405 Adams Water Use Analysis

5.2. **File Number:** PL16-019 127 - 150
Location of Property: 1367 Main Street
Project Description: Request by John Anderson for a Use Permit in order to establish a catering operation in addition to the existing

chocolate shop at an existing tenant space located at 1367 Main Street in the CB: Central Business district.

CEQA Determination: Staff finds that the project is exempt from the requirements of CEQA pursuant to Section 15301, Class 1, which exempts the operation, leasing, or minor alteration of existing facilities.
Prepared By: Aaron Hecock, Senior Planner
Recommendation: Staff feels the addition of a catering business to the existing chocolate shop will have minimal impact to surrounding businesses as it won't be an everyday use, will largely occur overnight, won't require the hiring of any additional staff, and will use the existing commercial kitchen. Therefore, staff recommends that the Planning Commission:

1. Determine that the project is exempt from the requirements of CEQA pursuant to Section 15301, Class 1, which exempts the operation, leasing, or minor alteration of existing facilities.

2. Accept the required findings and approve the Use Permit for 1367 Main Street.

Staff Report. 1367 Main St.
Attachment 1. 1367 Resolution
Attachment 2. 1367 Applicant Statement
Attachment 3. 1367 Plans and Photos
Attachment 4. 1367 Smoker Spec Sheets

6. SCHEDULED MATTERS

7. DEPARTMENT REPORTS
This is an opportunity for staff to report on or update the Commission on any relevant matters.

8. AGENDA FORCAST
Attached is a summary document of pending projects and up coming and items of priority and interest that will be placed on future agendas. This is also an opportunity for the Commission as a whole to request items be placed on future agendas for discussion. These items should be consistent with, and work to implement adopted Council Goals.

8.1. PC TENTATIVE AGENDA February 2 2017 Update 151 - 153

9. ADJOURNMENT
The next Regular Planning Commission meeting is scheduled for February 21, 2017, at 6:00 p.m. in the Vintage Hall Board Room located at 465 Main Street.

This agenda was posted at City Hall, 1480 Main Street, and at Vintage Hall, 465 Main Street, St. Helena, California on February 3, 2017.

Noah Housh, Planning Director

Appeal. A person who is dissatisfied with a decision of the Planning Commission may appeal that decision to the City Council pursuant to Municipal Code Section 17.08.180, Appeal procedure. Actions of the Planning Commission will be listed on the City Council agenda the following Tuesday to give the City Council opportunity to review the Planning Commission's decision. Absent of an appeal by the City Council or by a citizen, the appeal period will terminate two weeks after the Planning Commission hearing.

Special Assistance for the Disabled. In compliance with the Americans with Disabilities Act, if you need special assistance to participate in this meeting, please call the City Clerk's Office (707) 967-2792. Notification 48 hours prior to the meeting will enable City to make reasonable arrangements to ensure accessibility to this meeting (28 CFR35.102-35.104 ADA Title II). However, City staff will attempt to assist at any time with accessibility. The City Clerk has equipment to assist those with a hearing impairment.

PUBLIC TESTIMONY PROCEDURES

Pursuant to the Government Code Section 54954.3, the public may address the Commission on each agenda item during the Commission's consideration of that item. Each speaker has the option to state his or her name for the record before testifying. Depending on the number of speakers or the interest of the item, the Planning Commission Chairman may also restrict, at his/her discretion, the speaker's time to three minutes. The

Chairman may also restrict public comments if they become irrelevant to the agenda item or repetitious of prior comments. All persons interested may appear and be heard or submit written statements prior to the Planning Commission meeting. Please note that if you challenge the City's decision on any of these matters in court, you may be limited to raising only those issues you or someone else raised at the meeting or in written correspondence delivered to the City at, or prior to, the meeting.

CHALLENGING DECISIONS OF CITY ENTITIES

The time limit within which to commence any lawsuit or legal challenge to any quasi-adjudicative decision made by the City of St. Helena is governed by Section 1094.6 of the Code of Civil Procedure, unless a shorter limitation period is specified by any other provision, including without limitation Government Code section 65009 applicable to many land use and zoning decisions, Government Code section 66499.37 applicable to the Subdivision Map Act, and Public Resources Code section 21167 applicable to the California Environmental Quality Act (CEQA). Under Section 1094.6, any lawsuit or legal challenge to any quasi-adjudicative decision made by the City must be filed no later than the 90th day following the date on which such decision becomes final. Any lawsuit or legal challenge, which is not filed within that 90-day period, will be barred. Government Code section 65009 and 66499.37, and Public Resources Code section 21167, impose shorter limitations periods and requirements, including timely service in addition to filing.

If a person wishes to challenge the above actions in court, they may be limited to raising only those issues they or someone else raised at the meeting described in this notice, or in written correspondence delivered to the City of

St. Helena, at or prior to the meeting. In addition, judicial challenge may be limited or barred where the interested party has not sought and exhausted all available administrative remedies.

SUPPLEMENTAL MATERIAL RECEIVED AFTER THE POSTING OF THE AGENDA

Any supplemental writings or documents distributed to a majority of the Planning Commission regarding any item on this Agenda, after the posting of the Agenda, will be available for public review in the Planning Department's Office located at 1480 Main Street, St. Helena, California, during normal business hours. In addition, such writings or documents will be made available on the City's web site at http://cityofsthelena.org and will be available for public review at the respective meeting.

Action Minutes
City of St. Helena Planning Commission

Regular Meeting
Tuesday, November 15, 2016 @ 6:00 PM
Vintage Hall Board Room - Second Floor
465 Main Street, St. Helena

PLEASE NOTE: Any person who wishes to speak regarding an item on the agenda or make a comment under the "Oral Communication" portion of the agenda may do so, but please observe the time limit of three minutes.

1. PLEDGE OF ALLEGIANCE

2. CALL TO ORDER AND ROLL CALL
Chairperson: Grace Kistner
Vice Chair: Mary Koberstein
Commissioners: Bobbi Monnette, Tracy Sweeney
Absent: Sarah Parker
Staff Present: Noah Housh, Planning and Community Improvement Director, Aaron Hecock, Senior Planner, Thomas Brown, City Attorney, Steve Palmer, Director of Public Works, Cindy Black, City Clerk, Xinia Gamero, Administrative Assistant.

3. PUBLIC FORUM:
This is an opportunity for the public to address the Commission on items of interest to the public that are NOT listed on the agenda. Because of restrictions imposed by the Brown Act, the Commission may not engage in discussion nor take action on matters not described on the agenda. **Please observe the time limit of three minutes.**

Chair Kistner opened Public Comment.

Vicky Bradshaw addressed the Commission.

Chair Kistner closed Public Comment.

4. CONSENT ITEMS
Members of the Commission or the public may ask that any items be considered individually for purposes of considering alternative action, for extended discussion, or for public comment. Unless that is done, one motion may be used to adopt all recommended actions. (Roll Call Vote)

4.1. None

5. PUBLIC HEARINGS

Commissioner Monnette recused herself from Items 5.1 and 5.2 due to a conflict, living in close proximity to properties, and left the dais at 6:06 p.m.

5.1. DESCRIPTION: Request by Our Town St. Helena (OTSH) for Tentative Subdivision Map, Demolition Permit and Design Review approval to demolish a single-family home and accessory structures in order to construct 8 new, affordable, attached townhomes on the property located at 684 McCorkle Avenue in the HR: High Density Residential district.

RECOMMENDED ACTION:
1. Make a recommendation to the City Council whether or not to grant the applicant's request for a water neutrality waiver;
2. Confirm the applicant's request for an alternative frontage improvement; and find that
3. The project is exempt from the requirements of CEQA pursuant to Section 15332, which exempts projects characterized as in-fil development; and
4. Accept the required findings and recommend approval of the tentative subdivision map to the City Council and approve demolition permit and design review for the proposed subdivision and new construction at 684 McCorkle Avenue.

Aaron Hecock reported on Item.

Mary Stephenson, applicant addressed the Commission.

Chair Kistner opened Public Comment.

Vicky Bradshaw addressed the Commission.

Chair Kistner closed Public Comment.

City Attorney, Thomas B. Brown addressed the Commission.

MOTION: Commissioner Sweeney moved that the Planning Commission make a recommendation to the City Council to grant the applicant's request for a water neutrality in-line fee payment; confirm the applicant's request for an alternative frontage improvement; find the project exempt from the requirements of CEQA pursuant to Section 15332, which exempts projects characterized as in-fil development; and accept the required findings and recommend approval of the tentative subdivision map to the City Council and approve demolition permit and design review for the proposed subdivision and new construction at 684 McCorkle Avenue. The motion was seconded by Vice Chair Koberstein and roll call carried by the following vote:

AYES: Commissioners Sweeney, Koberstein and Kistner
NOES: None
ABSENT: Commissioner Parker
RECUSED: Commissioner Monnette
ABSTAIN: None

5.2. Tentative Map, Use Permit and Design Review applications requesting approval to subdivide an existing 2.5 acre parcel into 5 lots ranging in

size from 0.17 acres to 0.77 acres; and to construct two new homes each with a second dwelling unit on two of the newly created parcels, located at 574 Pope Street in the Medium Density Residential Zoning District.

RECOMMENDED ACTION:
1. Determine that the project is categorically exempt from the requirements of CEQA under CEQA Sections 15332, 15303 and 15061 (b) 3.
2. Accept the required findings and approve the Use Permit and Design Review for the requested reduction in density and construction of two new single family homes, each with a Second Dwelling Unit; and
3. Accept the required findings and recommend that the City Council approve the proposed subdivision of the parcel at 574 Pope Street into 4 new parcels and a private road.

Noah Housh reported on Item.

Chair Kistner opened Public Comment.

Robert Trinchero and Kevin Block addressed the Commission.

Chair Kistner closed Public Comment.

MOTION: Commissioner Sweeney moved to accept the required findings and approve the Design Review for construction of two new single family homes, each with a Second Dwelling Unit. The motion was seconded by Chair Kistner and roll call carried by the following vote:

AYES: Commissioners Sweeney, Kistner and Koberstein
NOES: None
ABSENT: Commissioner Parker
RECUSED: Commissioner Monnette
ABSTAIN: None

MOTION: Vice Chair Koberstein moved to recommend that the City Council deny the proposed subdivision of the parcel at 574 Pope Street into 4 new parcels and a private road. The motion was seconded by Chair Kistner and roll call carried by the following vote:

AYES: Commissioners Koberstein and Kistner
NOES: Commissioner Sweeney
ABSENT: Commissioner Parker
RECUSED: Commissioner Monnette
ABSTAIN: None

MOTION: Vice Chair Koberstein moved to deny the Use Permit for the requested reduction in density. The motion was seconded by Chair Kistner and roll call carried by the following vote:
AYES: Commissioners Koberstein and Kistner

NOES: Commissioner Sweeney
ABSENT: Commissioner Parker
RECUSED: Commissioner Monnette
ABSTAIN: None

Prior to the final vote on the item, applicant Robert Trinchero withdrew application.

6. SCHEDULED MATTERS

6.1. Request by the Planning Department for Planning Commission direction regarding application of Design Review requirements.

RECOMMENDED ACTION:
1. Support the request by staff to administratively approve minor modifications to existing properties, as identified in order to better utilize the resources of the Planning Department; or
2. Provide additional clarifying direction regarding the use of Design Review Exemptions as envisioned by the Planning Commission.

MOTION: Chair Kistner moved to continue Item 6.1 to date uncertain, to all participation by the full Planning Commission. The motion was seconded by Vice Chair Koberstein and roll call carried by the following vote:

AYES: Commissioners Kistner, Koberstein and Sweeney
NOES: None
ABSENT: Commissioner Parker
RECUSED: Commissioner Monnette
ABSTAIN: None

7. DEPARTMENT REPORTS
This is an opportunity for staff to report on or update the Commission on any relevant matters.

8. AGENDA FORCAST
Attached is a summary document of pending projects and up coming and items of priority and interest that will be placed on future agendas. This is also an opportunity for the Commission as a whole to request items be placed on future agendas for discussion. These items should be consistent with, and work to implement adopted Council Goals.

9. ADJOURNMENT: Chair Kistner adjourned the meeting at **7:46 p.m.**

APPROVED:

Grace Kistner
Chair, Planning Commission

ATTEST:

Noah Housh
Planning Director

Action Minutes
City of St. Helena Planning Commission

Regular Meeting
Tuesday, December 20, 2016 @ 6:00 PM
Vintage Hall Board Room - Second Floor
465 Main Street, St. Helena

PLEASE NOTE: Any person who wishes to speak regarding an item on the agenda or make a comment under the "Oral Communication" portion of the agenda may do so, but please observe the time limit of three minutes.

1. PLEDGE OF ALLEGIANCE

2. CALL TO ORDER AND ROLL CALL
Chairperson: Grace Kistner
Vice Chair: Vacant until filled.
Commissioners: Sarah Parker, Bobbi Monnette, Tracy Sweeney
Staff Present: Noah Housh, Planning and Community Improvement Director, Lilly Bianco, Contract Planner, Erica Smithies, Assistant Public Works Director, Thomas Brown, City Attorney, Xinia Gamero, Administrative Assistant.

3. PUBLIC FORUM:
This is an opportunity for the public to address the Commission on items of interest to the public that are NOT listed on the agenda. Because of restrictions imposed by the Brown Act, the Commission may not engage in discussion nor take action on matters not described on the agenda. **Please observe the time limit of three minutes.**

No Public Comment received.

4. CONSENT ITEMS
Members of the Commission or the public may ask that any items be considered individually for purposes of considering alternative action, for extended discussion, or for public comment. Unless that is done, one motion may be used to adopt all recommended actions. (Roll Call Vote)

Commissioner Monnette and Chair Kistner pulled Items 4.1 and 4.2 from Consent Calendar.

4.1. Approval of Minutes December 6, 2016
COMMISSION MINUTES 12-06-16

4.2. DESCRIPTION: Design Review Exemption requesting approval to construct a new exterior door, deck and staircase along the southern elevation of the existing residence, re-construct an existing non-conforming deck and staircase in a slightly new configuration and install a new French door on the western and northern elevation of the residence and construct a carport that was previously required but

never constructed for the existing single family residence at 1550 Allyn Avenue.

RECOMMENDED ACTION:
It is recommended by the Planning and Community Improvement Department that the Planning Commission:

1. Determine that the project is exempt from the requirements of CEQA under a Class 1 Categorical Exemption under Section 15301 of CEQA.

2. Accept the required findings and approve the required Design Review Exemption for the proposed project.

Noah Housh addressed the Commission.

MOTION: Commissioner Parker moved to approve the Consent Calendar as amended. The motion was seconded by Commissioner Monnette and roll call carried by the following vote:

AYES: Commissioner Parker, Monnette, Sweeney and Kistner
NOES: None
ABSENT: None
ABSTAIN: None

5. PUBLIC HEARINGS

5.1. DESCRIPTION: Requesting a Demolition Permit and Design Review Approval on behalf of property owner, John McGraw, to demolish the existing single family residence and construct a new single family residence and appurtenant improvements at 1225 Allyn Avenue in St. Helena.

RECOMMENDED ACTION::
Staff finds that the proposed configuration of the site, the overall design elements and proposed materials/finishes are in character with the neighborhood and the community in general. Because of this staff concludes that design review findings can be made and recommends that the Planning Commission:

1. Determine that the project is exempt from the requirements of CEQA, pursuant to Section 15301, which exempts demolition of existing structures and Section 15303, which exempts the construction single-family residences.

2. Accept the required findings and grant the demolition permit and design review approval for the McGraw Residence at 1225 Allyn Avenue.

Lilly Bianco reported on Item.

Bob Branstad and Shaun Faber addressed the Commission.

Chair Kistner opened Public Comment.

John Hawkins addressed the Commission.

Chair Kistner Closed Public Comment.

MOTION: Commissioner Monnette moved that the Planning Commission determine that the project is exempt from the requirements of CEQA, pursuant to Section 15301, which exempts demolition of existing structures and Section 15303, which exempts the construction of single-family residences and; accept the required findings and grant the demolition permit and design review approval as amended for the McGraw Residence at 1225 Allyn Avenue. The motion was seconded by Commissioner Sweeney and roll call carried by the following vote:

AYES: Commissioner Monnette, Sweeney, Parker and Kistner
NOES: None
ABSENT: None
ABSTAIN: None

Commissioner Parker recused herself due to conflict, having a personal relationship with applicant's family and left the dais.

City Attorney, Thomas B. Brown addressed the circumstances in regards to Commissioner Monnette expressing personal opinions of this item prior to the Planning Commission Public Hearing.

Commissioner Monnette read aloud a statement of disclosure to the Commissioners, City Attorney, applicant and the public. Commissioner Monnette stated she would address project independently of any prior opinions made.

Brian Russell, on behalf of applicant addressed the Commission and expressed satisfaction with Commissioner Monnette's statement of disclosure.

5.2. DESCRIPTION: Requesting a use permit to operate a 20 seat wine tasting room with retail sales, accessory administrative office space, and outdoor seating in an existing retail space at 1234 Adams Street. There will be two full time employees and one part time employee. Hours of operation will be between the hours of 10:00 a.m. to 6:00 p.m. seven days a week with special events limited to one per month with the potential for hours to be extended until 9:00 p.m. No exterior modifications are proposed as part of the use permit application.

RECOMMENDED ACTION:
The Planning and Community Improvement Department recommends that the Planning Commission:

1. Determine that the project is categorically exempt from the requirements of CEQA pursuant to CEQA Section 15301 “existing facilities” as the operation of a business within an existing private structure involving a negligible expansion of use beyond that existing at the time of the lead agency's determination.

2. Accept the required findings enumerated in Municipal Code Section 17.168 040 and adopt a resolution approving a Use Permit for the proposed Ladera Tasting Room.

Lilly Bianco addressed the Commission.

Chair Kistner opened Public Comment.

Brian Russel, on behalf of applicant, and citizen addressed the Commission.

Chair Kistner closed Public Comment.

MOTION: Commissioner Sweeney moved that the Planning Commission determine that the project is categorically exempt from the requirements of CEQA pursuant to CEQA Section 15301 “existing facilities” as the operation of a business within an existing private structure involving a negligible expansion of use beyond that existing at the time of the lead agency's determination; and moved to accept the required findings enumerated in Municipal Code Section 17.168 040 and adopt a resolution approving a Use Permit for the proposed Ladera Tasting Room located at 1234 Adams St. The motion was seconded by Chair Kistner and roll call carried by the following vote:

AYES: Commissioner Sweeney and Kistner
NOES: Commissioner Monnette
ABSENT: None
ABSTAIN: None
RECUSED: Commissioner Parker

Commissioner Parker returned to the dais.

6. SCHEDULED MATTERS

6.1. None

7. DEPARTMENT REPORTS

This is an opportunity for staff to report on or update the Commission on any relevant matters.

8. AGENDA FORCAST

Attached is a summary document of pending projects and up coming and items of priority and interest that will be placed on future agendas. This is also an opportunity for the Commission as a whole to request items be placed on future agendas for discussion. These items should be consistent with, and

work to implement adopted Council Goals.

8.1. TENTATIVE AGENDA

9. ADJOURNMENT: Chair Kistner adjourned the meeting at **7:06 p.m.**

APPROVED:

Grace Kistner
Chair, Planning Commission

ATTEST:

Noah Housh
Planning and Community Improvement Director

CITY OF ST. HELENA
PLANNING DEPARTMENT 1480 MAIN STREET- ST. HELENA, CA 94574
PLANNING COMMISSION

February 7, 2017

AGENDA SECTION: Consent

AGENDA ITEM: 4.2

FILE NUMBER: PL16-070

SUBJECT: Hoshall Residence Design Review Exemption

PREPARED BY: Lilly Bianco, Contract Planner

REVIEWED BY: Noah Housh, Planning Director

APPLICATION FILED: 09/22/16 **ACCEPTED AS COMPLETE:** 12/31/16

LOCATION OF PROPERTY: 1330 Madrona Avenue

APN: 009-163-008

GENERAL PLAN/ZONING: Medium Density Residential (MR)

APPLICANT: Mr. Ivan Lukrich **PHONE:** (707) 573-8291

PROJECT DESCRIPTION

Applicant, Ivan Lukrich, on behalf of property owners, Joyce Hoshall, is requesting Design Review approval to perform minor exterior modifications and construct a new master suite at the existing residence at 1330 Madrona Avenue. Specifically, the proposal requests approval to relocate entry steps and support columns such that they would be centered on the front porch; also proposed is the replacement of the existing roof with new composition shingles and the addition of a new master suite and deck at rear of the residence. All exterior modifications will be consistent with the existing materials and finishes. Pursuant to St. Helena Zoning Code, Section Sec. 17.164.060, staff recommends the Planning Commission approve an exemption from Design Review given that the project poses no substantial design problems and meets the criteria for an exemption pursuant to Municipal Code Section 17.164.030 and as described in more detail below.

ANALYSIS

GENERAL PLAN

The subject property exhibits a General Plan Land Use designation of Medium Density Residential. This land use designation allows single family detached and attached homes, secondary residential units, public and semi-public uses, and other compatible uses. The Medium density residential land use designation serves as the predominant residential land use designation and is intended to perpetuate the existing development patterns exhibited by St. Helena's established neighborhoods.

Relevant General Plan policies include:

2.6.15 Encourage new residential development in all density ranges that is consistent with scale and character of the older residential districts of the City, particularly the neighborhoods west of Main Street.

ZONING

Consistent with the GP land use designation, 1330 Madrona Avenue exhibits a zoning designation of MR: Medium Density Residential. The MR zoning district allows for single-family detached homes, accessory dwelling units and other compatible uses insofar as they conform to the development standards prescribed by Municipal Code Section 17.40.060.

Review of the project indicates that it meets all applicable development standards; the proposed project would introduce a new master suite and deck which would increase the square footage of the residence to 1,742 sf, which is within the allowable floor area of 2,580 square feet. At present, the building exhibits a non-conforming side setback as does the attached rear, covered porch. As proposed, the project will remove the covered porch and replace it with an uncovered deck that would encroach into the required setback by 5 feet. Pursuant to code section 17.112.060(b), open decks may encroach into a side setback provided they do not extend further than six feet into the required setback. As the replacement of the covered porch with an uncovered deck would resolve the non-conformity the project is determined to be in compliance with all applicable zoning

NET FLOOR AREA:

EXISTING RESIDENCE	1173 SF
PROPOSED ADDITION	480 SF
GARAGE	289 SF
COVERED PARKING EXEMPTION	- 200 SF
TOTAL	**1,742 SF**

FLOOR AREA RATIO: 1742 /7821 = 0.220

DESIGN REVIEW

The purpose of design review is to, among other things, promote the qualities that bring value to the community and foster attractiveness and functional utility of the community as a place to live and work. Consistent with Zoning Code Section 17.164.060, the

Commission may approve a design review exemption insofar as the project raises no substantial design problems of the sort enumerated in sections 17.164.010 to 17.164.030. The project therefore must be obviously consistent with the design criteria prescribed by Section 17.164.030 (detailed below) and exhibit a quality of design that is compatible with adjacent development, features a siting, scale, massing and architectural style that is generally consistent with the predominant development patterns, and that does not otherwise detract or negatively affect the established character of the surrounding neighborhood.

Design Review Criteria.

1. Consistency and compatibility with applicable elements of the general plan;
2. Compatibility of design with the immediate environment of the site;
3. Relationship of the design to the site;
4. Determination that the design is compatible in areas considered by the board as having a unified design or historical character;
5. Whether the design promotes harmonious transition in scale and character in areas between different designated land uses;
6. Compatibility with future construction both on and off the site;
7. Whether the architectural design of structures and their materials and colors are appropriate to the function of the project;
8. Whether the planning and siting of the various functions and buildings on the site create an internal sense of order and provide a desirable environment for occupants, visitors and the general community;
9. Whether the amount and arrangement of open space and landscaping are appropriate to the design and the function of the structures;
10. Whether sufficient ancillary functions are provided to support the main functions of the project and whether they are compatible with the project's design concept;
11. Whether access to the property and circulation systems are safe and convenient for pedestrians, cyclists and vehicles;
12. Whether natural features are appropriately preserved and integrated with the project;
13. Whether the materials, textures, colors and details of construction are an appropriate expression of its design concept and function and whether they are compatible with the adjacent and neighboring structure and functions;
14. In areas considered by the board as having a unified design character or historical character, whether the design is compatible with such character;
15. Whether the landscape design concept for the site, as shown by the relationship of plant masses, open space, scale, plant forms and foliage textures and colors create a desirable and functional environment and whether the landscape concept depicts an appropriate unity with the various buildings on the site;
16. Whether plant material is suitable and adaptable to the site, capable of being properly maintained on the site, and is of a variety which is suitable to the climate of St. Helena;
17. Whether sustainability and climate protection are promoted through the use of green building practices such as appropriate site/architectural design, use of green building materials, energy efficient systems and water efficient landscape materials.

Staff Findings

The proposed project is limited in scope with most of the work confined to the rear of the property. Proposed changes to the façade will be limited to relocation of entry steps and new porch columns to provide for a more symmetrical appearance and the replacement of the roof. Exterior modifications will be made to match the existing in material in color and therefore is expected to result in an appearance that is largely consistent with that existing. Given the very limited alterations to areas visible to the public, staff finds the proposed modifications to be of a scale, massing, and quality of design that is compatible with the other buildings and structures in the immediate vicinity and does not significantly deviate from the established character of the streetscape. Accordingly, the proposed project appears to be consistent with all applicable design review criteria.

CEQA

The project is exempt from the requirements of CEQA pursuant to Section 15301, which exempts minor alterations and additions to existing private structures. The proposed project is not subject to any of the exceptions to the use of a categorical exemption as outlined in CEQA Section 15300.2. The project site is not located on or near an environmentally sensitive area, is not visible from a scenic highway, is not included on a hazardous waste site, and will not impact historic resources or otherwise generate or contribute to any potentially significant impacts.

STAFF RECOMMENDATION

Staff recommends that the Planning Commission adopt a resolution finding that:

1. The project is exempt from the requirements of CEQA pursuant to CEQA Section 15301 as a minor alteration and addition to an existing structure.

2. Accepts the required findings and approves the design review exemption for the modifications to 1330 Madrona Avenue.

ATTACHMENTS

1. Resolution / Conditions of Approval
2. APN Map
3. Aerial View
4. Project Plans
5. Water Neutrality Analysis

CITY OF ST. HELENA PLANNING COMMISSION

RESOLUTION NO.

RESOLUTION OF THE PLANNING COMMISSION OF THE CITY OF ST. HELENA GRANTING APPROVAL OF A DESIGN REVIEW EXEMPTION FOR THE HOSHALL RESIDENCE LOCATED AT 1330 MADRONA AVENUE

PROPERTY OWNER: Mrs. Joyce Hoshall **APN:** 009-163-008

Recitals

A. Whereas, Mr. Ivan Lukrich submitted an application for a Design Review Exemption to perform minor exterior modifications and construct a new master suite at the existing residence at 1330 Madrona Avenue in the MR: Medium Density Residential District, and

D. **Whereas**, A staff report dated February 7, 2017 and incorporated herein by reference analyzed the projects consistency with the Design Criteria enumerated in Section 17.164.030 of the Municipal Code, and

D. **Whereas**, the Planning Commission of the City of St. Helena, State of California, considered the project, staff report, and all testimony, written and spoken, at a duly noticed public hearing on January 17, 2017, and

E. Now, therefore let it be found that, the Planning Commission approves the Design Review Exemption and authorizes the modifications contained in said plans based on the findings below and subject to the conditions of approval enumerated herein.

Resolution

1. The project is categorically exempt from the requirements of CEQA pursuant to Section 15301, which exempts minor alterations and additions to existing private structures. The proposed project is not subject to any of the exceptions to the use of a categorical exemption as outlined in CEQA Section 15300.2. The project site is not located on or near an environmentally sensitive area, is not visible from a scenic highway, is not included on a hazardous waste site, and will not impact historic resources or otherwise generate or contribute to any potentially significant impacts
2. Design Review:

   The purpose of design review is to, among other things, promote the qualities that bring value to the community and foster attractiveness and functional utility of the community as a place to live and work. Consistent with Zoning Code Section 17.164.060, the Commission may approve a design review exemption insofar as

the project raises no substantial design problems of the sort enumerated in sections 17.164.010 to 17.164.030. The project therefore must be obviously consistent with the design criteria prescribed by Section 17.164.030 (detailed below) and exhibit a quality of design that is compatible with adjacent development, features a siting, scale, massing and architectural style that is generally consistent with the predominant development patterns, and that does not otherwise detract or negatively affect the established character of the surrounding neighborhood.

Design Review Criteria:

1. Consistency and compatibility with applicable elements of the general plan;
2. Compatibility of design with the immediate environment of the site;
3. Relationship of the design to the site;
4. Determination that the design is compatible in areas considered by the board as having a unified design or historical character;
5. Whether the design promotes harmonious transition in scale and character in areas between different designated land uses;
6. Compatibility with future construction both on and off the site;
7. Whether the architectural design of structures and their materials and colors are appropriate to the function of the project;
8. Whether the planning and siting of the various functions and buildings on the site create an internal sense of order and provide a desirable environment for occupants, visitors and the general community;
9. Whether the amount and arrangement of open space and landscaping are appropriate to the design and the function of the structures;
10. Whether sufficient ancillary functions are provided to support the main functions of the project and whether they are compatible with the project's design concept;
11. Whether access to the property and circulation systems are safe and convenient for pedestrians, cyclists and vehicles;
12. Whether natural features are appropriately preserved and integrated with the project;
13. Whether the materials, textures, colors and details of construction are an appropriate expression of its design concept and function and whether they are compatible with the adjacent and neighboring structure and functions;
14. In areas considered by the board as having a unified design character or historical character, whether the design is compatible with such character;
15. Whether the landscape design concept for the site, as shown by the relationship of plant masses, open space, scale, plant forms and foliage textures and colors create a desirable and functional environment and whether the landscape concept depicts an appropriate unity with the various buildings on the site;
16. Whether plant material is suitable and adaptable to the site, capable of being properly maintained on the site, and is of a variety which is suitable to the climate of St. Helena;
17. Whether sustainability and climate protection are promoted through the use of green building practices such as appropriate site/architectural design, use of green building materials, energy efficient systems and water efficient landscape materials.

The project is consistent with the design review criteria prescribed by Municipal Code Section 17.164.030 in that the proposed project is limited in scope with most of the

work confined to the rear of the property. Proposed changes to the façade will be limited to reallocation of entry steps and new porch columns to provide for a more symmetrical appearance and the replacement of the roof. Exterior modifications will be made to match the existing in material in color and therefore is expected to result in an appearance that is largely consistent with that existing. Given the very limited alterations to areas visible to the public, the proposed modifications appear to be of a scale, massing, and quality of design that is compatible with the other buildings and structures in the immediate vicinity and does not significantly deviate from the established character of the streetscape.

F. Now therefore be it further resolved that, the Design Review for the above described project is granted subject to compliance with all applicable provisions of the Zoning Code subject to each of the following conditions. Permit shall be in conformance with all City ordinances, rules, regulations and policies in effect at the time of issuance of a building permit. The conditions noted below are particularly pertinent to this permit and shall not be construed to permit violation of other laws and policies not so listed.

Conditions of Approval

1. The Permit shall be in conformance with all City ordinances, rules, regulations and policies in effect at the time of issuance of a building permit. The conditions noted below are particularly pertinent to this permit and shall not be construed to permit violation of other laws and policies not so listed.

2. The plans submitted for building permit review shall be in substantial conformance with the plans on file in the Planning Division, date stamped December 5, 2016, expect as modified by the following conditions.

3. The Design Review Exemption shall be vested within one (1) year from the date of approval. A building permit for the use allowed under this approval shall have been obtained within one (1) year from the effective date of the Use Permit and Design Review decision or these approvals shall expire; provided however that the approved Use Permit and Design Review may be extended for up to two (2) one-year periods pursuant to the St. Helena Municipal Code, Section 17.08.030, Extension of Permits and Approvals.

4. The Design Review Exemption shall become effective fourteen (14) calendar days after approval, provided that the action is not appealed by the City Council or any other interested party within that 14 day period.

5. Any request for an extension of the Design Review Exemption must be justified in writing and received by the Planning Department at least thirty (30) days prior to expiration.

6. All required fees, including planning fees, development impact fees, building fees, retrofit fees, and St. Helena Unified School District fees shall be paid prior to issuance of building permit.

7. Prior to issuance of construction permits, compliance with conditions of approval shall be clearly identified on all plans. A copy of approved plans with the conditions listed *on* said plans shall be maintained on-site during construction activities.

8. Conditions shall be achieved at such a time as determined by the City and shall be achieved at the requisite stage and before issuance of certificate of occupancy or initiation of use unless another time is set by law or by this approval. Occupancy or final inspection of a project may be withheld if all conditions, including payment of fees for services rendered by the City, are not met.

9. The applicant shall defend and indemnify and hold the City, its agents, officers, and employees harmless of any claim, action or proceedings to attack, set aside, void or annul an approval so long as the City promptly notifies the applicant of any such claim, action, or proceedings and the City cooperates fully in the defense of the action or proceedings.

10. This Design Review approval shall run with the land and shall be binding upon all parties having any right, title or interest in the real property or any part thereof, their heirs, successors and assigns, and shall inure to their benefit and benefit of the City of St. Helena.

11. The primary purpose of this review is for compliance with the General Plan and Zoning Ordinance. The owner/applicant is responsible for meeting with the Building Official / Fire Inspector to review compliance with Building and Fire Codes, including fire protection systems and the accessibility standards of Title 24.

12. No structure shall be permitted over any existing property lines. Documentation of the location of the property lines shall be submitted with plans for building permit issuance.

13. A building permit is required for any onsite demolition, construction or change of occupancy.

14. Fire sprinklers could be required depending on the extent of the modifications to the celling envelop. This will be determined as a component of the building permit review.

Public Works Department Conditions of Approval

15. Approval of this project shall be subject to the requirements of, and all improvements shall be designed and constructed in accordance with, the most current version at the time of improvement plan submittal, Caltrans Standards and Specifications, the City of St. Helena Municipal Code, the St. Helena Water and Sewer Standards, the St. Helena Street, Storm Drain and Sidewalk Standards, and all current federal, state and county codes governing such improvements

16. For any improvements outside the existing building envelope, a grading and drainage plan showing topographic data, all easements, infrastructure onsite and directly adjoining, and an erosion control plan shall be submitted for review and

approval by the City Engineer prior to the issuance of a building permit. If the project entails more than 50 cubic yards of soil disturbance, 10,000 square feet of disturbance area, a cut or fill of 3 feet or more, or alteration of any drainage pattern, a grading permit shall be required.

17. No added drainage from new hardscape, roofs or pool improvements shall be allowed to leave the site; improvement plans shall show how drainage will be handled on site and at the property lines to prevent inundation of neighboring properties. Pre-developed and 100 year storm event overflow site drainage shall be directed in to an existing storm drain or gutter through City standard under-sidewalk drains where applicable.

18. Where fire sprinklers are required, applicant shall install an appropriately-sized water service with appropriate backflow and meter devices prior to Certificate of Occupancy. Fire system calculations shall be submitted with the Grading and Drainage Plan to verify fire service lateral and meter sizing.

19. The applicant shall incorporate water conservation practices and water efficient fixtures into the proposed project per the Water Use Analysis Report prepared by Ivan Lukrich, Architect on October 28, 2016 and date stamped January 13, 2017. Water saving measures may include, but are limited to the introduction of 2 gal per minute showerheads, 1.5 gal lavatory faucet, 1.5 gal kitchen faucet, 1.28 gal water closet, 19.7 gal clothes washer, and 6.3 gal per cycle dishwasher , as detailed in the Water Neutrality Analysis.

20. The applicant shall conform to the City of St. Helena Water and Sewer Standards Section 6-2.10 which includes assessing the adequacy of the lateral, replacing if necessary and installing any needed cleanouts.

21. The applicant shall repair all public improvements that are damaged by the construction process in accordance with the City Water/Sewer/Street/Storm Drain/Sidewalk Standards prior to Certificate of Occupancy.

22. All frontages shall be required to install curb, gutter and sidewalk where there is none. Any missing or broken curb, gutter and/or sidewalk along the project frontage shall be installed or replaced per City specifications prior to Certificate of Occupancy, extent to be determined by the Public Works Department.

23. Existing streets being cut by new utility services will require edge grinding and an A.C. overlay per City standards, extent to be determined by the Public Works Department.

24. All driveway approaches shall be per current City and ADA standards. Where none exists, or where deteriorating or non-standard driveway approaches exist, they shall be installed or replaced at the direction of the Public Works Department prior to Certificate of Occupancy. The driveway approach for the access drive to the two properties shall be replaced in order to conform to current ADA standards.

25. Any existing driveway approach not directly connected to a driveway shall be replaced with sidewalk/curb/gutter, as applicable and as directed by the Public Works Department prior to Certificate of Occupancy.

26. An encroachment permit shall be required for any work performed in the public right of way.

27. The applicant shall record easements for all utilities, access and drainage patterns where facilities or features cross one parcel to serve another parcel, as determined by the City's Public Works Director.

28. Access to the building site shall conform to current access standards and be approved by the Fire Department prior to building permit issuance.

I HEREBY CERTIFY that the foregoing Design Review Exemption was duly and regularly approved by the Planning Commission of the City of St. Helena at a regular meeting of said Planning Commission held on February 7, 2017 by the following roll call vote:

AYES:
NOES:
ABSENT:
ABSTAIN:

APPROVED:	ATTEST:
Grace Kistner Chair, Planning Commission	Noah Housh, Planning and Community Improvement Director

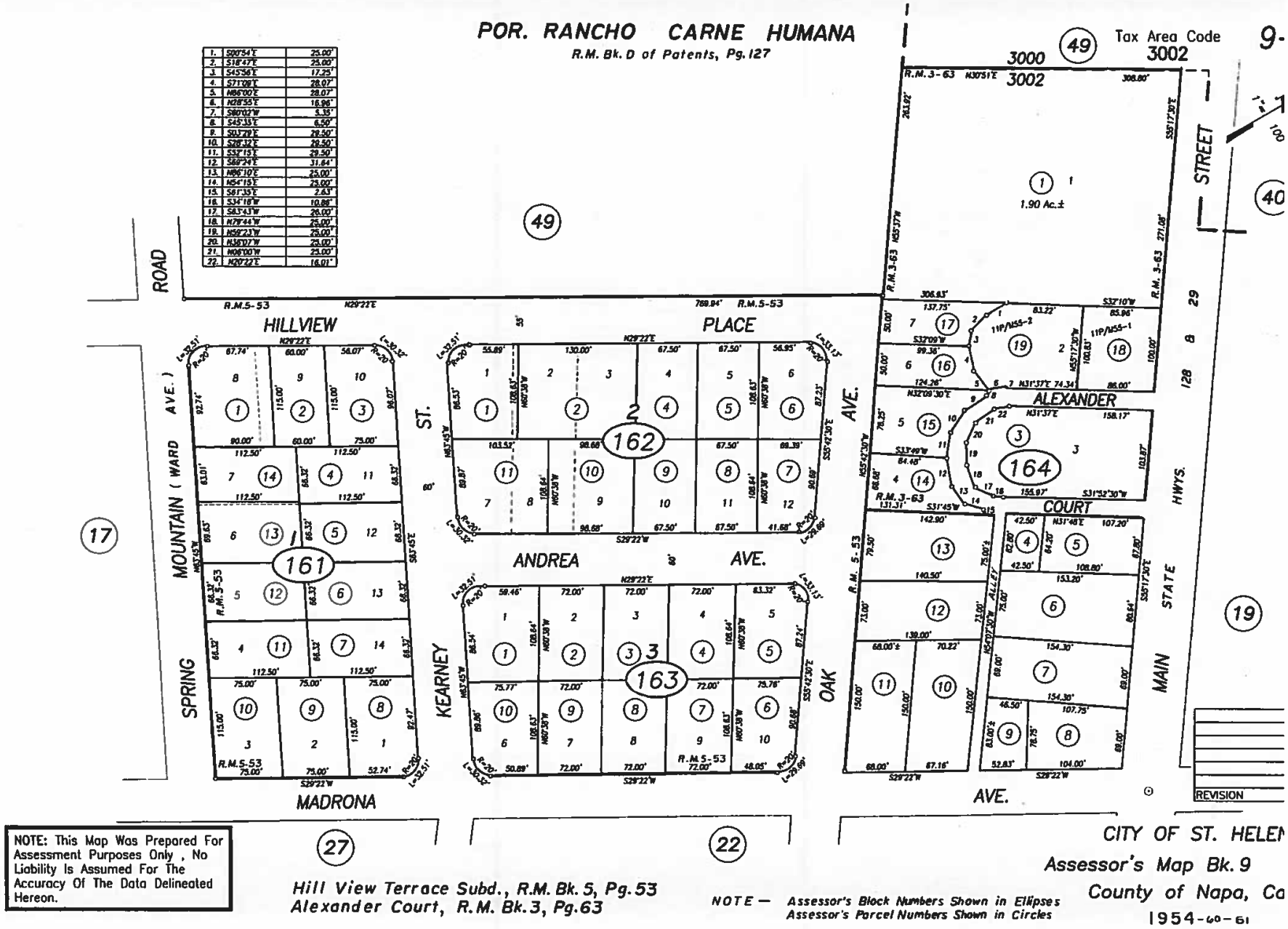
POR. RANCHO CARNE HUMANA
R.M. Bk. D of Patents, Pg. 127
Tax Area Code 3002
3000
3002
49
1.90 Ac.±
STREET
MAIN
STATE
HWYS.
ALEXANDER
COURT
ALLEY
HILLVIEW
PLACE
ANDREA
AVE.
KEARNEY
OAK
MOUNTAIN (WARD AVE.)
SPRING
MADRONA
ROAD
R.M. 5-53
R.M. 3-63
161
162
163
164
17
19
27
22
40
REVISION
CITY OF ST. HELEN
Assessor's Map Bk. 9
County of Napa, Ca
1954-60-61
NOTE: This Map Was Prepared For Assessment Purposes Only, No Liability Is Assumed For The Accuracy Of The Data Delineated Hereon.
Hill View Terrace Subd., R.M. Bk. 5, Pg. 53
Alexander Court, R.M. Bk. 3, Pg. 63
NOTE — Assessor's Block Numbers Shown in Ellipses
Assessor's Parcel Numbers Shown in Circles

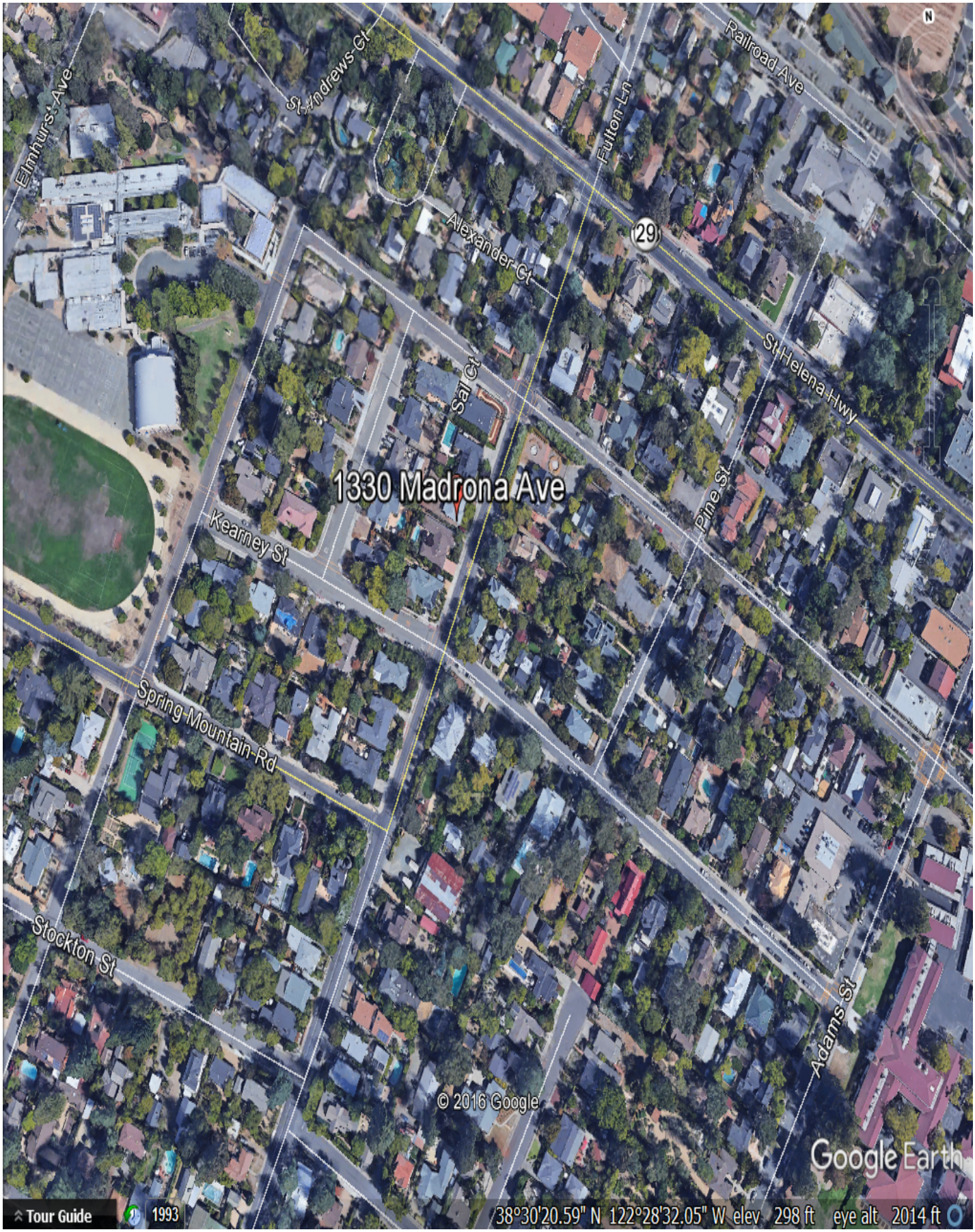
Elmhurst Ave
St Andrews Ct
Fulton Ln
Railroad Ave
Alexander Ct
29
St Helena Hwy
Sal Ct
1330 Madrona Ave
Pine St
Kearney St
Spring Mountain Rd
Stockton St
Adams St
© 2016 Google
Google Earth
Tour Guide
1993
38°30'20.59" N 122°28'32.05" W elev 298 ft eye alt 2014 ft

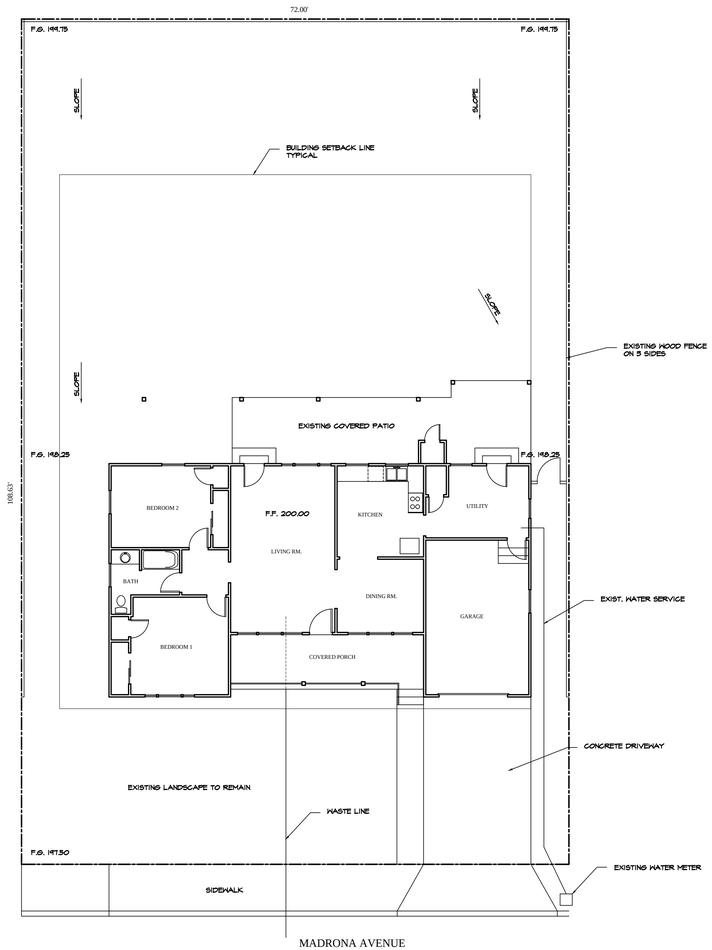

SITE PLAN - EXISTING

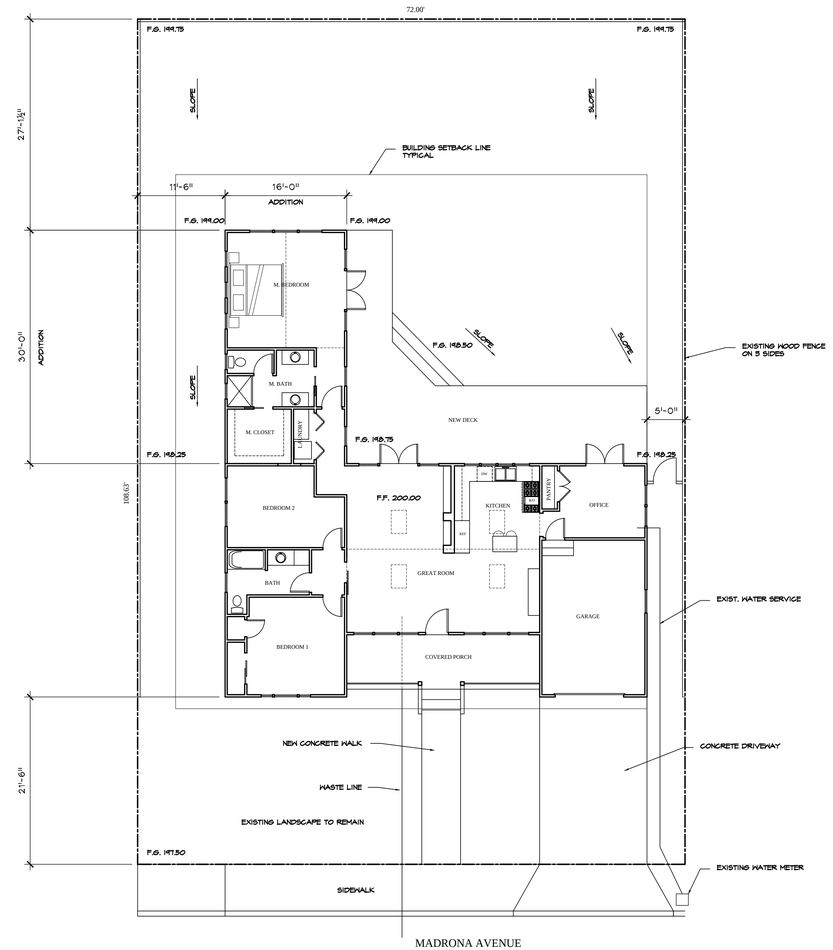

SITE PLAN - PROPOSED

SCOPE OF WORK:
EXTERIOR: ENTRY STEPS WILL BE RELOCATED TO CENTER OF PORCH WITH NEW PORCH COLUMNS. GARAGE DOOR WILL BE REPLACED. EXISTING ROOF WILL BE REPLACED WITH NEW COMPOSITION ROOF. A NEW MASTER SUITE WILL BE ADDED TO THE REAR. NEW DECK ADDED AT REAR.
MATERIAL AND FINISHES TO MATCH EXISTING.
INTERIOR: EXISTING KITCHEN AND BATH WILL BE RENOVATED, CEILING IN GREAT ROOM WILL BE VAULTED

SITE DATA
LOT AREA =7,821 S.F.
BUILDING AREA
EXISTING LIVING AREA = 1,173 S.F.
EXISTING GARAGE AREA = 264 S.F.
LIVING AREA ADDITION = 480 S.F.
TOTAL LIVING AREA = 1,653 S.F.

FAR
LIVING AREA 1,653 S.F. + GARAGE 84 S.F. = 1,742 S.F.
FAR ALLOWED = 2,350 S.F.

SHEET INDEX

A1	SITE PAN
A2	FLOOR PLAN - PROPOSED
A3	ROOF PLAN - PROPOSED
A4	EXTERIOR ELEVATIONS - PROPOSED
A5	BUILDING SECTIONS
AB1	FLOOR PLAN - AS BUILT & DEMOLITION
AB2	EXTERIOR ELEVATIONS - AS BUILT

VICINITY MAP

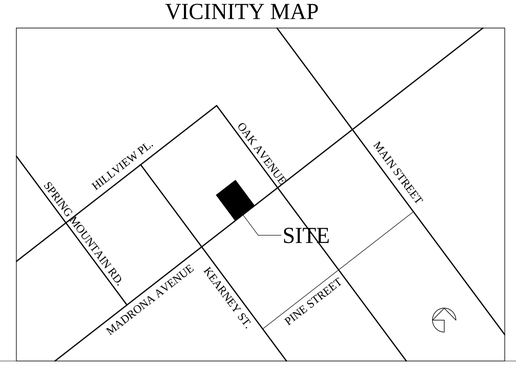

© Copyright

LICENSED ARCHITECT
IVAN M. LUKRICH
NO. C-20670
EXP. SEPT. 2017
STATE OF CALIFORNIA

Revisions

IVAN M. LUKRICH
ARCHITECT
P.O. BOX 1642, SANTA ROSA, CA 95402
VOICE 707.573.8291 FAX 707.573.3012

HOSHALL RESIDENCE
RESIDENCE RENOVATION
AND ADDITION
1330 MADRONA AVENUE
ST. HELENA, CALIFORNIA

SITE PLAN
EXISTING & PROPOSED

Job Number
HOSHALL

Drawn By
IML

Scale
1/8" = 1'-0"

Date
10-25-2016

Sheet Number
A1
of

WATER USE ANALYSIS

EXISTING PLUMBING FIXTURES WILL BE REPLACED WITH NEW FIXTURES MEETING CALIFORNIA GREEN BUILDING STANDARDS CODE.

EXISTING FIXTURES	NEW FIXTURES
WATER CLOSET = 3.5 GPM	WATER CLOSET (2X1.28 GPM) = 2.56 GPM
SHOWER = 3.0 GPM	SHOWER (2X2.0 GPM) = 4.0 GPM
LAVATORY FAUCET = 2.5 GPM	LAVATORY FAUCET (3X1.5 GPM) = 4.5 GPM
KITCHEN FAUCET = 2.5 GPM	KITCHEN FAUCET = 1.5 GPM
TOTAL = 12.00 GPM	TOTAL = 12.56 GPM

EXISTING CLOTHES WASHER AND DISHWASHER WILL BE REPLACED WITH CURRENT ENERGY EFFICIENT MODELS.
OVERALL WATER DEMAND WILL DECREASE FROM CURRENT USAGE.

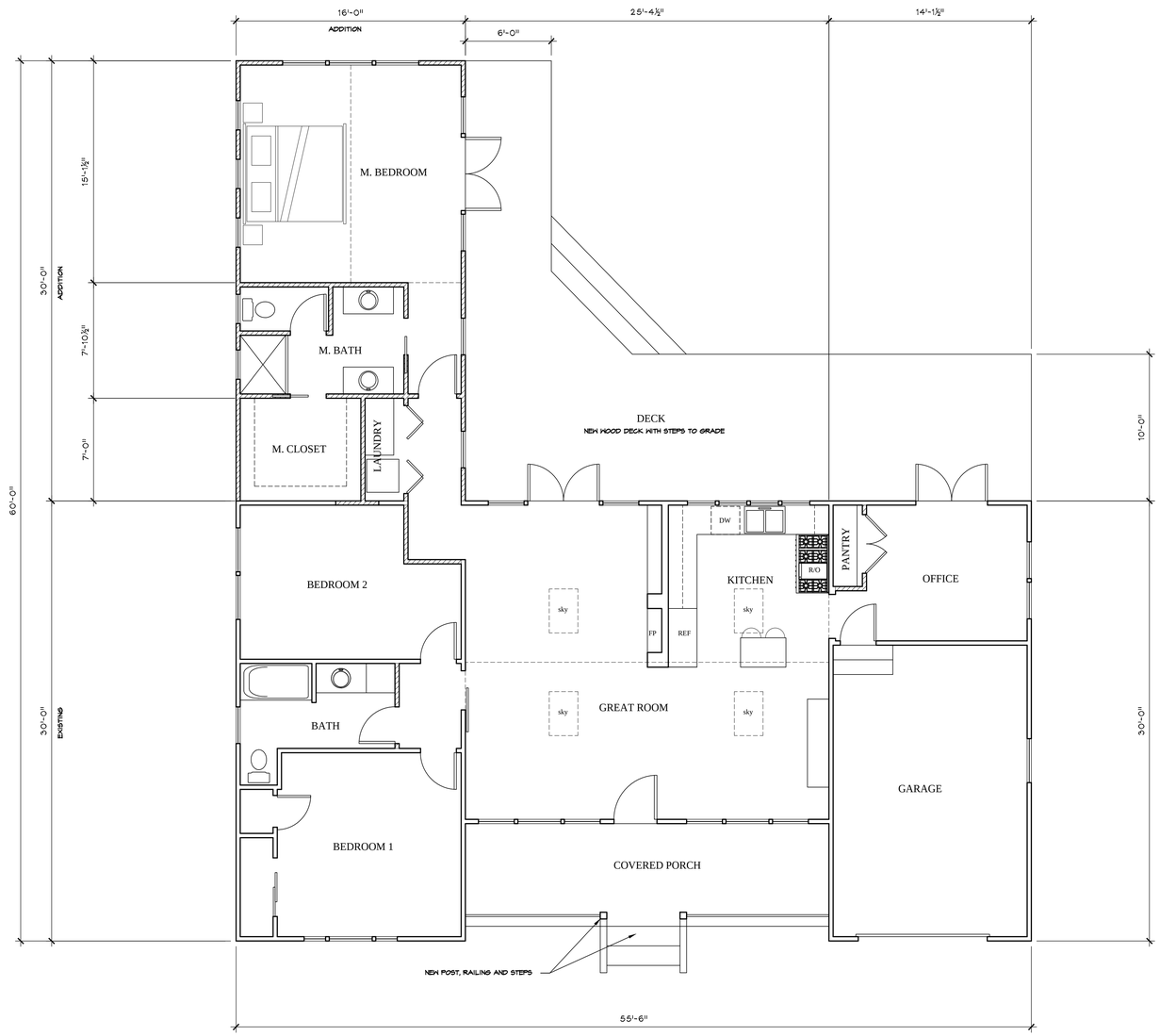

FLOOR PLAN - PROPOSED

FLOOR AREA

LIVING AREA	1,173 S.F.
ADDITION	480 S.F.
TOTAL LIVING AREA	1653 S.F.
GARAGE	284 S.F.

WALL LEGEND

- EXISTING WALLS
- NEW 2X4 WALL CONSTRUCTION WITH R-15 BATT INSULATION
- NEW 2X6 WALL CONSTRUCTION WITH R-21 BATT INSULAITON

NORTH

© Copyright

LICENSED ARCHITECT
IVAN M. LUKRICH
NO. C-20670
EXP. SEPT. 2012
STATE OF CALIFORNIA

Revisions

IVAN M. LUKRICH
ARCHITECT
P.O. BOX 1642, SANTA ROSA, CA 95402
VOICE 707.573.8291 FAX 707.573.3012

HOSHALL RESIDENCE
RESIDENCE RENOVATION
APN: 027-060-009
1330 MADRONA AVENUE
ST. HELENA, CALIFORNIA

FLOOR PLAN
-

Job Number
HOSHALL

Drawn By
IML

Scale
1/4" = 1'-0"

Date
9-21-2016

Sheet Number
A2
of

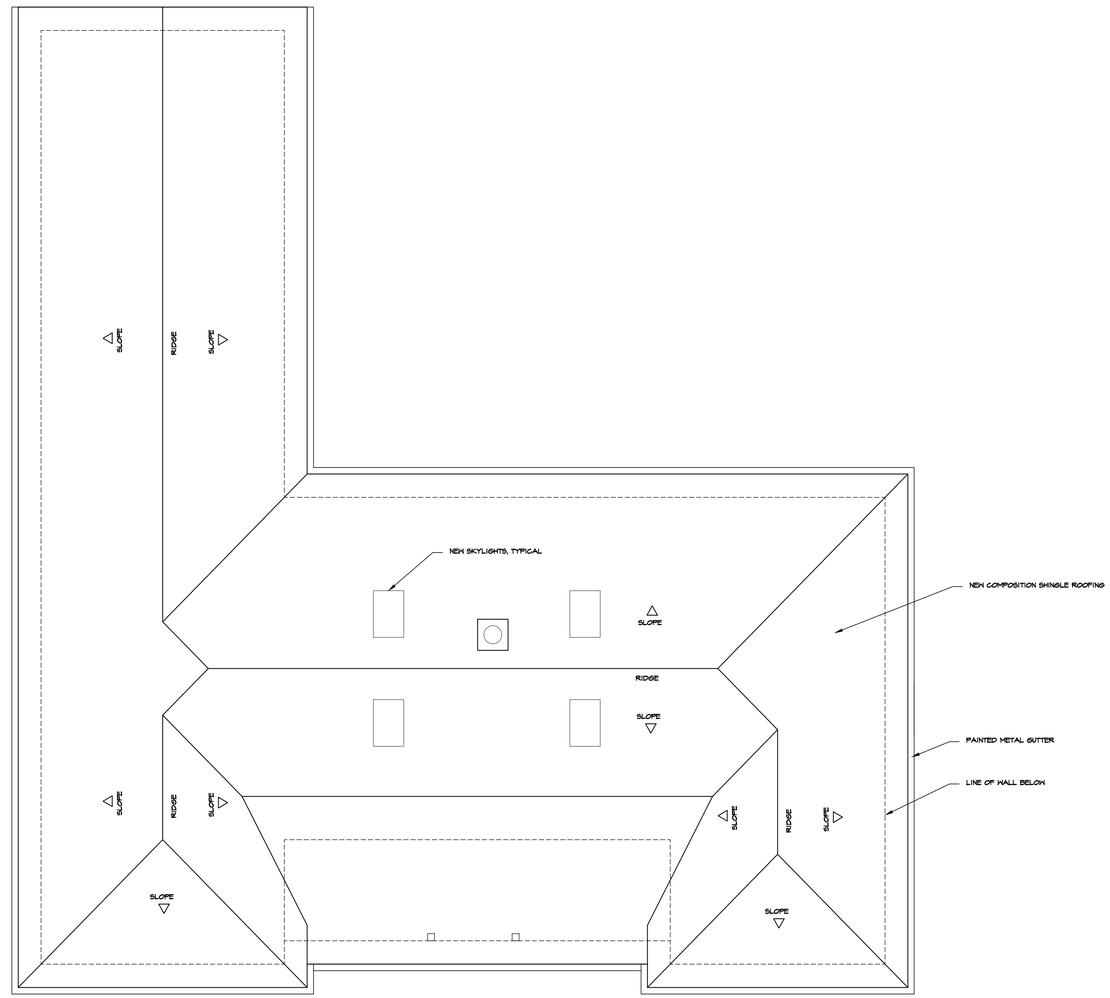

ROOF PLAN

© Copyright

LICENSED ARCHITECT
IVAN M. LUKRICH
NO. C-20670
EXP. SEPT. 2013
STATE OF CALIFORNIA

Revisions

IVAN M. LUKRICH
ARCHITECT
P.O. BOX 1642, SANTA ROSA, CA 95402
VOICE 707.573.8291 FAX 707.573.3012

HOSHALL RESIDENCE
RESIDENCE RENOVATION
(NON-PROFIT)
1330 MADRONA AVENUE
ST. HELENA, CALIFORNIA

ROOF PLAN
-

Job Number
HOSHALL

Drawn By
IML

Scale
1/4" = 1'-0"

Date
9-21-2016

Sheet Number
A3
of

FRONT ELEVATION

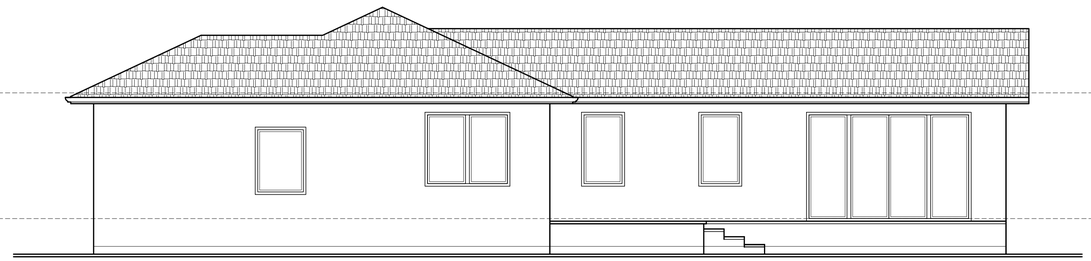

RIGHT ELEVATION

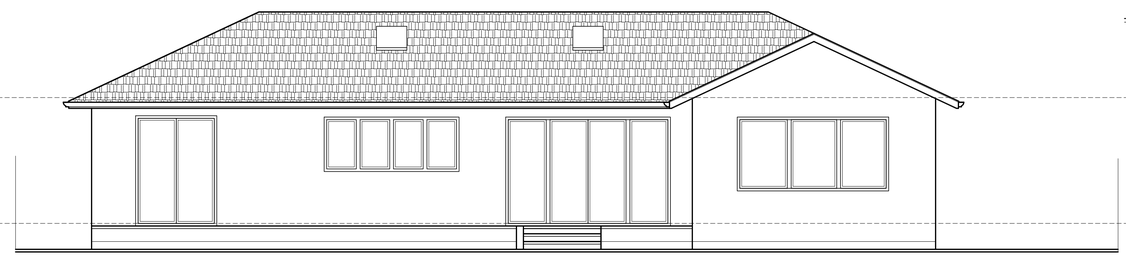

REAR ELEVATION

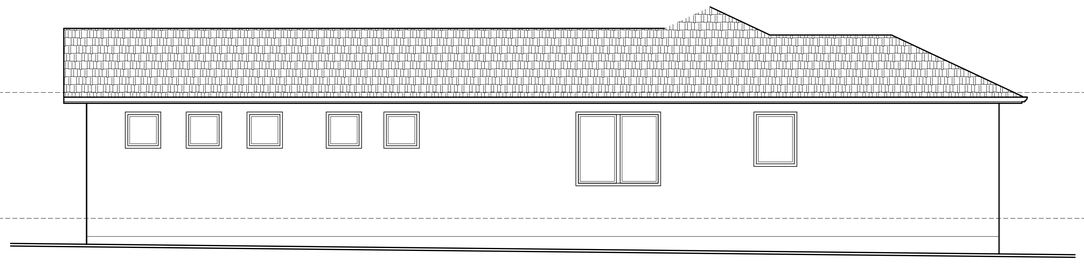

LEFT ELEVATION

© Copyright

LICENSED ARCHITECT
IVAN M. LUKRICH
NO. C-20670
EXP. SEPT. 2017
STATE OF CALIFORNIA

Revisions

IVAN M. LUKRICH
ARCHITECT
P.O. BOX 1642, SANTA ROSA, CA 95402
VOICE 707.573.8291 FAX 707.573.3012

HOSHALL RESIDENCE
RESIDENCE RENOVATION
WINE CASK ROAD
1330 MADRONA AVENUE
ST. HELENA, CALIFORNIA

EXTERIOR ELEVATIONS

Job Number
HOSHALL

Drawn By
IML

Scale
1/4" = 1'-0"

Date
9-21-2016

Sheet Number
A4
of

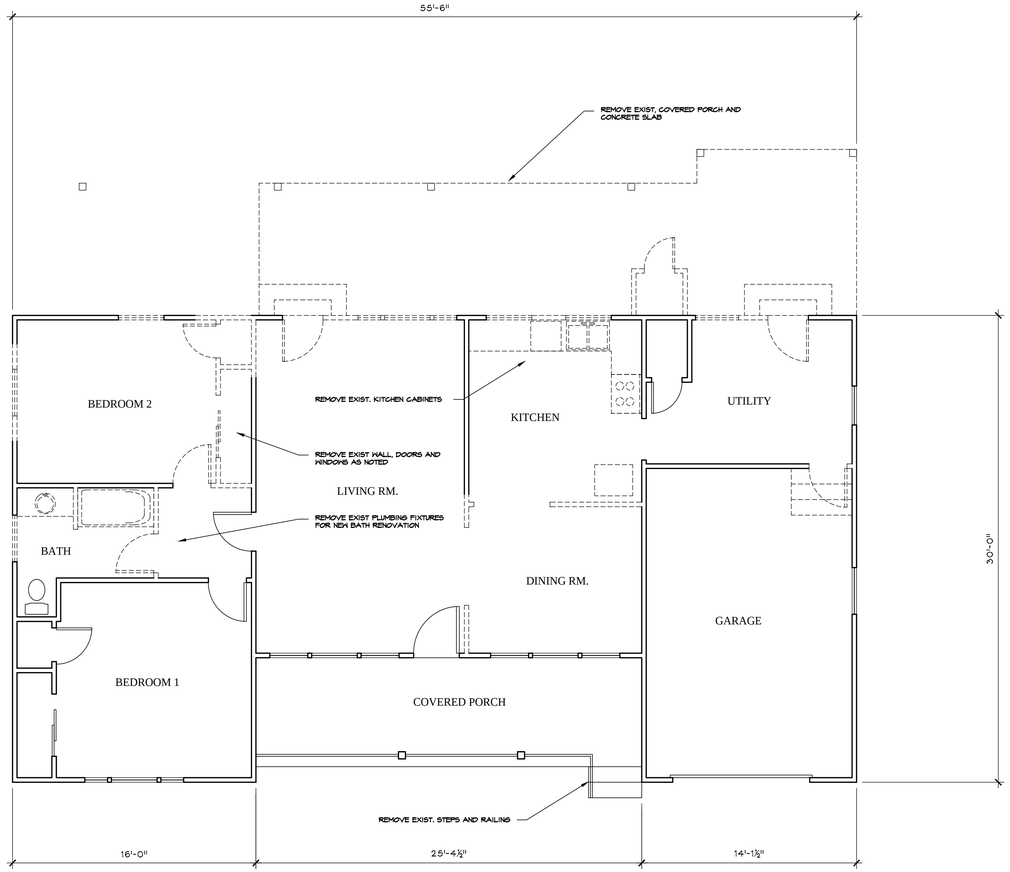

AS BUILT PLAN

FLOOR AREA

LIVING AREA	1,173 S.F.
GARAGE	284 S.F.

WALL LEGEND

EXISTING WALLS

WALLS, DOORS, WINDOWS TO BE DEMOLISHED

© Copyright

LICENSED ARCHITECT
IVAN M. LUKRICH
NO. C-20670
EXP. SEPT. 2017
STATE OF CALIFORNIA

Revisions

IVAN M. LUKRICH
ARCHITECT
P.O. BOX 1642, SANTA ROSA, CA 95402
VOICE 707.573.8291 FAX 707.573.3012

HOSHALL RESIDENCE
RESIDENCE RENOVATION
0000-000-000
1330 MADRONA AVENUE
ST. HELENA, CALIFORNIA

AS BUILT FLOOR PLAN
-

Job Number
HOSHALL

Drawn By
IML

Scale
1/4" = 1'-0"

Date
9-21-2016

Sheet Number
AB1
of

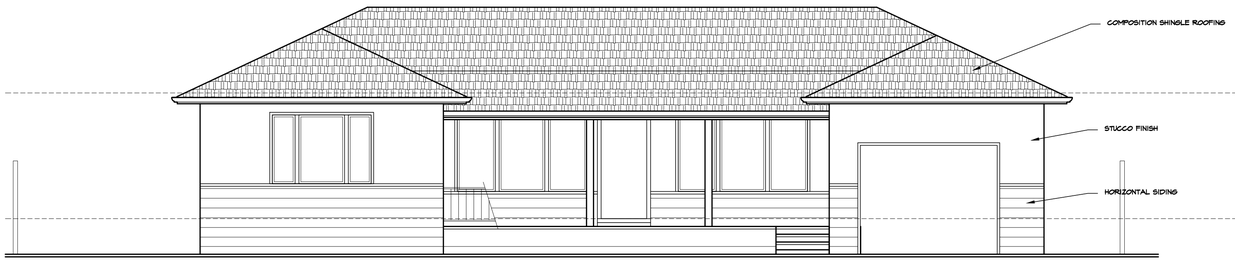

FRONT ELEVATION

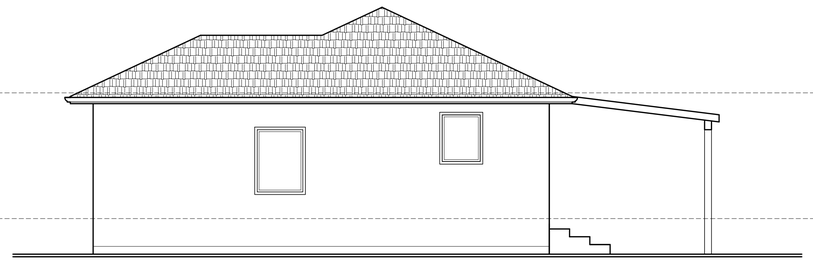

RIGHT ELEVATION

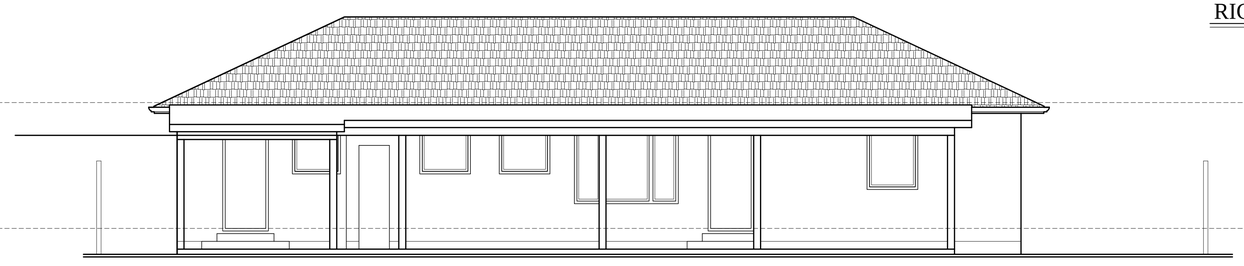

REAR ELEVATION

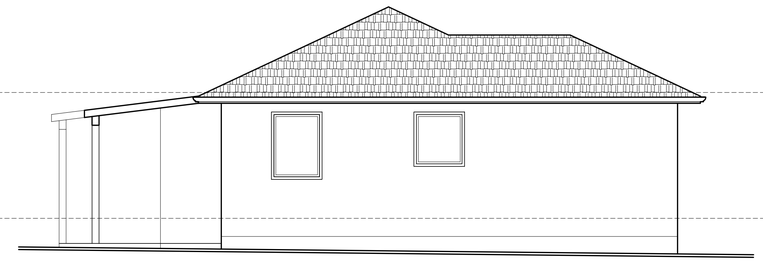

LEFT ELEVATION

© Copyright

LICENSED ARCHITECT
IVAN M. LUKRICH
NO. C-20670
EXP. SEPT. 2017
STATE OF CALIFORNIA

Revisions

IVAN M. LUKRICH
ARCHITECT
P.O. BOX 1642, SANTA ROSA, CA 95402
VOICE 707.573.8291 FAX 707.573.3012

HOSHALL RESIDENCE
RESIDENCE RENOVATION
WORK SHEET PACKAGE
1330 MADRONA AVENUE
ST. HELENA, CALIFORNIA

AS BUILT
EXTERIOR ELEVAITONS

Job Number
HOSHALL

Drawn By
IML

Scale
1/4" = 1'-0"

Date
9-21-2016

Sheet Number
AB2
of

Ivan M. Lukrich, Architect
P.O. Box 1642
Santa Rosa, CA 95402
707.573.8291
Fax: 707.573.3012

October 28, 2016

Clark Stauffer
City of St. Helena
1480 Main Street
St. Helena, CA 94574

Re: Water Neutrality Analysis
1330 Madrona Avenue
Residence Addition and Renovation

Existing Theoretical Domestic Water Demand
The theoretical water demand for the existing two bedroom residence is calculated based on 150 gallon per day (gpd) per bedroom in accordance with the City of St. Helena Water Policy.

Theoretical Domestic Water Demand = 2 bedrooms x 150 gpd/bedroom
Theoretical Domestic Water Demand = 300 gpd

Existing Irrigation Demand to remain unchanged.

Proposed Theoretical Domestic Water Demand
The proposed residence will be outfitted with water efficient fixtures to meet the requirements of the California Breen Building Standards Code and City of St. Helena requirements. Below is a summary of water saving fixtures that will be installed in the residence and the performance specifications for each plumbing fixture.

Showerheads	2 gallons per minute
Lavatory Faucet	1.5 gallons per minute
Kitchen Faucet	1.5 gallons per minute
Water Closet	1.28 gallons per flush
Clothes Washer	19.7 gallons per load
Dish Washer	6.3 gallons per load

Utilizing the California Green Building Standards Code and the water use specifications above are used to calculate the theoretical domestic water demand for the proposed 3 bedroom residence. The calculations are presented in the attached Proposed Water Use Calculation Spreadsheet and the theoretical proposed water demand was determine to be 210 gallons per day.

Proposed water conservation efforts shall be compared to those existing flows quantitatively. Those standards can be found at websites for the LEED standards, Energy Star standards and major cities like San Francisco's water conservation guides. Water conservation devices proposed in the water analysis will be required by condition of approval and must be inspected and verified at certification of occupancy.

Accepted theoretical demand for residential flows/uses

Toilet	3 flushes/day/occupant
Faucet	0.25 minutes/3 times/day/occupant
Shower	8 minutes/shower/day/occupant
Kitchen faucet	4 minutes/day/occupant
Clothes Washer	0.37 load/day/occupant
Dish Washer	0.1 load/day/occupant

Calculation

Fixture	Flow Rate Gpm, gpf	Flow Duration min., flush, load	Daily Use per occup.	Number of occup.	GPD
Shower	2	8	1	6	96
Lav. faucet	1.5	0.25	3	6	6.75
Kitch. Faucet	1.5	4	1	6	36
Toilet	1.28	1	3	6	23.40
Clothes Wash	19.7	1	0.37	6	43.73
Dish Wash	6.3	1	0.1	6	3.78
				Total	209.66

Existing vs Proposed Water Demand

The above calculations indicate that the proposed project will result in a theoretical net decrease in water demand of 90 gpd (300 gpd- 210 gpd) after implementation of required water saving features in the new structure.

Ivan M. Lukrich, Architect

CITY OF ST. HELENA
PLANNING DEPARTMENT 1480 MAIN STREET- ST. HELENA, CA 94574
PLANNING COMMISSION

February 7, 2017

AGENDA ITEM: 4.3

FILE NUMBER: PL16-084

SUBJECT: Request from the United Methodist Church for approval of a Design Review Exemption to allow the construction of a 400-square foot, free standing shade structure to serve the Sun and Stars Montessori School at 1425 Oak Avenue.

PREPARED BY: Noah Housh, Planning Director

REVIEWED BY: Noah Housh, Planning Director

APPLICATION FILED: October 20, 2016

ACCEPTED AS COMPLETE: November 19, 2016

LOCATION OF PROPERTY: 1425 Oak Avenue

APPLICANT: United Methodist Tammy Harbison

PHONE: 707-967-1984

APN: 009-224-007

GENERAL PLAN/ZONING: Medium Density Residential/Medium Density Residential

PROPERTY DESCRIPTION:
The parcel is an 0.15 acre parcel, developed with a single family home currently used to house a Montessori based childcare center. The site is located just north of the United Methodist Church, on the corner of Adams Avenue and Oak Street.

PROJECT DESCRIPTION:
Project requests approval of a Design Review Exemption to allow the installation of a 12-foot tall, 400-square foot cloth shade structure to cover the play area at the rear of the building at 1425 Oak Avenue.

ANALYSIS

GENERAL PLAN

The project site is designated as Medium Density Residential by the City of St Helena 1993 General Plan and is located within the Urban Limit Line. Further, the 1993 General Plan identifies that the property is located within the Adams Street Historic District.
The 1993 General Plan identifies that:

The MDR designation provides for single-family detached and attached homes, secondary residential units, public and semi-public uses, and similar and compatible uses. Residential densities shall be in the range of 5.1 to 12.0 dwelling units per gross acre. The MDR designation is the predominant residential designation, occurring throughout large areas of the City. The wide distribution of this designation is intended to maintain a development pattern in newly developing areas that is consistent with historic development patterns.

The property is located within the Charter Oak Historic Resource District. As such, while no impacts to historic resources are anticipated, some of the most applicable General Plan policies are found in the Historic Resources Element of the General Plan.

Specifically, some of the most applicable General Plan Policies include:

7.5.3 Encourage new commercial and office development in all districts to be compatible with the image and character of the historic Main Street area.

7.5.9 Require new development in or adjacent to historic areas or building, to be compatible in pattern and character with existing historic buildings.

2.6.27 Prohibit commercial uses that are primarily tourist-serving in nature, and that are inconsistent with the community image of St. Helena.

Staff Response: Staff finds that the proposed installation of a shade structure to serve the Montessori pre-school is in compliance with the General Plan in that the use is a commercial land use serving the surrounding residential properties in close proximity to the school; the installation of the shade structure will have no negative impacts on the historic character or nature of the neighborhood and the commercial preschool land use supports the community image of St Helena.

ZONING

The project site is located in the Medium Density Residential (MDR) Zoning District. The MDR zoning district is consistent with and implements the MDR General Plan designation.

Section 17.40 (Medium Density Residential District) of the zoning code identifies that modifications to existing properties require Design Review approval.

Municipal Code Section 17.40.060 identifies the development criteria, including building height, setbacks, lot coverage, Floor Area Ratio (F.A.R.), etc. for structures in the MDR Zoning District.

Staff Response: Staff has review the proposed design of the shade structure and finds that it meets the 3-foot setback required for accessory structures, does not impact the allowable F.A.R. given that it is open on all sides, and that the 12-foot proposed height is in keeping with the accessory structure height limits in the MDR Zoning District. No other development criteria are applicable to the proposed installation of an accessory shade structure at 1425 Oak Avenue.

CEQA
Staff finds that the project qualifies for a Class 3 Categorical Exemption under Section 15303 of the California Environmental Quality Act.

WATER
Based on this description of the proposed use, staff finds that the project will be in compliance with the requirements of the Ordinance, given that there is no proposed increase in the water use on the property.

DESIGN REVIEW-Keep, Delete or Modify as Needed
The purpose of design review is to, among other things, promote the qualities that bring value to the community and foster attractiveness and functional utility of the community as a place to live and work. The following design criteria should be considered by the Planning Commission in review of this application (Zoning Code Section 17.164.030):

1. Consistency and compatibility with applicable elements of the general plan;
2. Compatibility of design with the immediate environment of the site;
3. Relationship of the design to the site;
4. Determination that the design is compatible in areas considered by the board as having a unified design or historical character;
5. Whether the design promotes harmonious transition in scale and character in areas between different designated land uses;
6. Compatibility with future construction both on and off the site;
7. Whether the architectural design of structures and their materials and colors are appropriate to the function of the project;
8. Whether the planning and siting of the various functions and buildings on the site create an internal sense of order and provide a desirable environment for occupants, visitors and the general community;
9. Whether the amount and arrangement of open space and landscaping are appropriate to the design and the function of the structures;
10. Whether sufficient ancillary functions are provided to support the main functions of the project and whether they are compatible with the project's design concept;
11. Whether access to the property and circulation systems are safe and convenient for pedestrians, cyclists and vehicles;
12. Whether natural features are appropriately preserved and integrated with the project;
13. Whether the materials, textures, colors and details of construction are an appropriate expression of its design concept and function and whether they are compatible with the adjacent and neighboring structure and functions;
14. In areas considered by the board as having a unified design character or historical character, whether the design is compatible with such character;
15. Whether the landscape design concept for the site, as shown by the relationship of plant masses, open space, scale, plant forms and foliage textures and colors create a desirable and functional environment and whether the landscape concept depicts an appropriate unity with the various buildings on the site;
16. Whether plant material is suitable and adaptable to the site, capable of being properly maintained on the site, and is of a variety which is suitable to the climate of St. Helena;

17. Whether sustainability and climate protection are promoted through the use of green building practices such as appropriate site/architectural design, use of green building materials, energy efficient systems and water efficient landscape materials.

Staff finds that the proposed project is consistent with the required design review criteria listed above, as identified in the attached resolution.

CORRESPONDENCE

As of the completion of this report, staff has received one letter (identified as from the parents of the children attending Sun and Stars Pre-School) requesting support for the proposed project. This letter has been attached to the report for the Commission to review.

ISSUES

No outstanding or unresolved issues have been identified with the proposal to install a 12-foot tall, 400-square foot cloth shade structure to cover the play area at the rear of the building at 1425 Oak Avenue.

STAFF RECOMMENDATION

It is recommended by the Planning and Community Improvement Department that the Planning Commission:

1. Determine that the project is exempt from the requirements of CEQA as a Class 3 Categorical Exemption under Section 15303 of CEQA.

2. Accept the required findings and approve the Design Review Exemption for the proposed installation of a 12-foot tall, 400-square foot cloth shade structure to cover the play area at the rear of the building at 1425 Oak Avenue.

ATTACHMENTS

1. Resolution to Approve the Project
2. Applicant Provided Project Description/Summary
3. Project Plans (Renderings, Photos, Site Plans, Elevations, Floor Plans and Details)
4. Public Comment Letter

CITY OF ST. HELENA PLANNING COMMISSION

RESOLUTION PC20xx-xx

RESOLUTION OF THE PLANNING COMMISSION OF THE CITY OF ST. HELENA GRANTING APPROVAL OF A DESIGN REVIEW EXEMPTION TO ALLOW THE INSTLLATION OF A 400-SQUARE FOOT SHADE STRUCTURE LOCATED AT 1425 OAK AVENUE

PROPERTY OWNER: United Methodist Church **APN:** 009-224-007

Recitals

A.Whereas, Tammy Harbison submitted an application for Design Review to allow the installation of a 12-foot tall, 400-square foot cloth shade structure to cover the play area at the rear of the building at 1425 Oak Avenue in the Medium Density Residential Zoning District; and

B. Whereas, the Planning Commission of the City of St. Helena, State of California, considered the project, staff report, and all testimony, written and spoken, at a duly noticed public hearing on February 7, 2017.

C. Now, therefore let it be found that, the Planning Commission approves the requested Use Permit and Design Review on the following basis:

Resolution

A. The Planning Commission hereby finds that this project qualifies for a Class 3 Categorical Exemption pursuant to Section 15303, of the California Environmental Quality Act (CEQA).

B. The Planning Commission has considered the Design Review design criteria identified in Municipal Code Section 17.164.030 to support the motion to approve the Design Review given that the project has been found to demonstrate:

1. Consistency and compatibility with applicable elements of the general plan in that the project maintains the standards for lot sizes and development, identified in the Medium Density Residential designation given that the proposed structure will serve a pre-school use serving the surrounding residential neighborhood;

2. Compatibility of design with the immediate environment of the site given that the design maintains historic design features and materials in that the structure is a free-standing shade structure with no impacts to any historic resources;

3. Relationship of the design to the site given the scale of the addition, the proposed setbacks and the context of the neighborhood is supported given that the project is a free-standing accessory structure meeting all development criteria of the Zoning District for the proposed use;

4. Determination that the design is compatible in areas considered by the Commission as having a unified design or historical character given the historic scale and design features incorporated into the proposal is supported given that the structure is accessory to the primary structures and use on site, is subordinate in scale and height to the other structure on the site and surrounding the property and is a typical element of the approved preschool land use;

5. Whether the design promotes harmonious transition in scale and character in areas between different designated land use given the surrounding residential properties is supported given that the structure is in the rear of the property and proposed to be located over the existing play equipment on the property;

6. Compatibility with future construction both on and off the site given the access, context and historic nature of the surrounding neighborhood is supported given that no impacts to access is anticipated and the single post of the propose structure simplify incorporation of the structure into the existing context;

7. Whether the architectural design of structures and their materials and colors are appropriate to the function of the project providing appropriate design elements and exterior features is supported in that the structure is a free-standing, cloth shade structure;

8. Whether the planning and siting of the various functions and buildings on the site create an internal sense of order and provide a desirable environment for occupants, visitors and the general community which the project does through appropriate setbacks and thoughtful site planning is supported given that the structure will shard the existing play equipment on the property, improving the usability of this equipment and further defines the play area;

9. Whether the amount and arrangement of open space and landscaping are appropriate to the design and the function of the structures which they are given the provided site plan, setback and landscaping proposed is found in that the project provides appropriate setbacks and thoughtful site planning for the location of the structure;

10. Whether sufficient ancillary functions are provided to support the main functions of the project and whether they are compatible with the project's design concept which the outdoor decks, pool and rear yard arbor are found to be is supported as the shade structure will expand on the usability of the ancillary functions already on site;

11. Whether access to the property and circulation systems are safe and convenient for pedestrians, cyclists and vehicles which they are given the continuation of the

single family use and maintenance of the existing access to the property is found given that no changes to the current circulation are proposed;

12. Whether natural features are appropriately preserved and integrated with the project which the project seeks to do through careful site planning is supported as no natural features of the site are proposed to be impacted by the proposed structure;

13. Whether the materials, textures, colors and details of construction are an appropriate expression of its design concept and function and whether they are compatible with the adjacent and neighboring structure and functions which they are given the historic design themes and elements is found in that the cloth material of the proposed structure is compatible with the variety of the materials and structures in the surrounding neighborhood;

14. In areas considered by the board as having a unified design character or historical character, whether the design is compatible with such character which the design is found to be, given the features and elements referenced above is supported given that the structure is accessory to the primary structures and use on site, is subordinate in scale and height to the other structure on the site and surrounding the property and is a typical element of the approved preschool land use;

15. Whether the landscape design concept for the site, as shown by the relationship of plant masses, open space, scale, plant forms and foliage textures and colors create a desirable and functional environment and whether the landscape concept depicts an appropriate unity with the various buildings on the site which it does through careful and appropriate planting choices and locations is found to be maintained in that no changes to the proposed landscaping are proposed;

16. Whether plant material is suitable and adaptable to the site, capable of being properly maintained on the site, and is of a variety which is suitable to the climate of St. Helena, which it is given the drought tolerant elements proposed is found to be maintained in that no changes to the proposed landscaping are proposed;

17. Whether sustainability and climate protection are promoted through the use of green building practices such as appropriate site/architectural design, use of green building materials, energy efficient systems and water efficient landscape materials which is, based on the significant energy and water saving requirements of the California Building Code and City of St Helena development criteria is supported given that the project will provide shade on the property minimizing the solar heat gain associated with the amount of sun directly falling onto the project site.

C. Now, therefore be it resolved that the Planning Commission, in keeping with Zoning Code Section 17.92.050, identifies that the requested Design Review meets the requirements for modification of structures within the -Historic Preservation (-HP) Overlay District and finds that:

18. That the alteration is compatible with the architectural style of the existing structures is supported in that the structure is a free-standing, cloth shade structure, supported by a single post;

19. That the alteration does not eliminate elements that are required to maintain the essential form and character of the structure is found given that no changes to any on site structures are proposed;

20. That the alternation is compatible with adjoining structures and the use of such structures is supported given that the cloth material of the proposed structure is compatible with the variety of the materials and structures in the surrounding neighborhood and the single support post minimizes any impacts on the surrounding context.

D. Now therefore be it further resolved that, the Design Review Exemption for the above described project is granted subject to compliance with all applicable provisions of the Zoning Code subject to each of the following conditions. Permit shall be in conformance with all City ordinances, rules, regulations and policies in effect at the time of issuance of a building permit. The conditions noted below are particularly pertinent to this permit and shall not be construed to permit violation of other laws and policies not so listed.

1. The Design Review shall be vested within one (1) year from the date of approval. A building permit for the use allowed under this approval shall have been obtained within one (1) year from the effective date of the Design Review decision or these approvals shall expire; provided however that the approved Design Review may be extended for up to two (2) one-year periods pursuant to the St. Helena Municipal Code, Section 17.08.030, Extension of Permits and Approvals.

2. This permit is valid for this use and design only. New permits must be applied for any change in use. These permits will expire if the use is discontinued pursuant to then existing ordinances and regulations.

3. The Design Review shall not become effective until fourteen (14) calendar days after approval, providing that the action is not appealed by the City Council or any other interested party within that 14 day period.

4. Any request for an extension of the Design Review must be justified in writing and received by the Planning Department at least thirty (30) days prior to expiration.

5. All required fees, including planning fees, development impact fees, building fees, retrofit fees, and St. Helena Unified School District fees shall be paid prior to issuance of building permit.

6. Compliance with all permit conditions shall be clearly identified on all plans submitted for building permit approval, shall occur in accordance with specific regulations but in all cases no later than prior to occupancy or initiation of use unless another time is set by law or by this approval. Occupancy or final inspection of a project may be withheld if all conditions, including payment of fees for services rendered by the City, are not met.

7. The applicant will defend and indemnify and hold the City, its agents, officers, and employees harmless of any claim, action or proceedings to attack, set aside, void or annl an approval so long as the City promptly notifies the applicant of any such claim, action, or proceedings and the City cooperates fully in the defense of the action or proceedings.

8. Provided they are in general compliance with the approved Design Review, minor modifications found to be in substantial conformance with the approved design may be approved by the Planning Director.

9. This Design Review shall run with the land and shall be binding upon all parties having any right, title or interest in the real property or any part thereof, their heirs, successors and assigns, and shall inure to their benefit and benefit of the City of St. Helena.

10. The primary purpose of this review is for compliance with the General Plan and Zoning Ordinance. The owner/applicant is responsible for meeting with the Building Official / Fire Inspector to review compliance with Building and Fire Codes, including fire protection systems and the accessibility standards of Title 24.

11. Construction documents shall be in compliance with approved plans and exhibits.

Public Works Department Conditions of Approval

12. All activities affecting storm water and/or erosion, air quality, traffic control and equipment and/or material storage on grading and construction sites are required to be managed in accordance with State and Federal regulations, City of St. Helena standards and Best Management Practices (BMPs).

13. Any public improvements, including curd gutter sidewalk or drive-approach, damaged during the installation of the shade structure are required to be repaired in keeping with the requirements of the City of St Helena Public Works Department.

Fire Department Conditions of Approval

14. The materials of the shade structure are required to meet the requirements of the City of St Helena Fire Department.

Building Department Conditions of Approval

15. A building permit is required for all onsite demolition, construction and/or change of occupancy.

16. The applicant will be required to comply with the codes adopted at the time the applicant applies for a building permit. At this time the City of St. Helena utilizes the 2013 Title 24 codes.

17. When submitting plans for a building permit, the plans shall include all documentation listed on the building permit application checklist.

18. The applicant shall provide a construction waste management plan with the building permit application.

19. The plans for construction shall include a checklist for compliance with the California Green Buildings Standards Code, mandatory measures. Provide a reference on the checklist indicating where the mandatory measures can be found on the plans.

20. When submitting plans, the title page shall include all information referenced on the building permit application checklist Title Page requirements.

21. Building Permit application materials and plans shall include any documentation pertaining to special loads applicable to the design and the specified section of the code that addresses the condition; special inspections for any systems or components requiring special inspection; requirements for seismic resistance; and a complete list of deferred submittals at time of application. Any deferral of the required submittal items shall have prior approval of the Building Official however deferral of fire sprinkler design is not allowed.

I HEREBY CERTIFY that the foregoing Use Permit and Design Review was duly and regularly approved by the Planning Commission of the City of St. Helena at a regular meeting of said Planning Commission held on February 7, 2017 by the following roll call vote:

AYES:
NOES:
ABSENT:
ABSTAIN:

APPROVED:

_____
Grace Kistner
Chair, Planning Commission

ATTEST:

_____
Noah Housh,
Planning and Community Improvement Director

Attachment 2

Written Statement

Project Description:
Install a single post cantilever fabric UV Protection shade over preschool playground. The shade will be provided by *USA Shade* and meets fire and safety requirements. We previously had a large tree that provided shade, but was removed because it was dying. We need new shade to cover our preschool playground and block UV rays away from the children. Nothing will be removed. The proposed umbrella will provide 400 square feet of shade.

Location: in the backyard of 1425 Oak Ave in St. Helena.

Measurements 20' X 20' and 12' height

Tammy Harbison 10-20-16

Tammy Harbison, Executive Director Date

Attachment 3

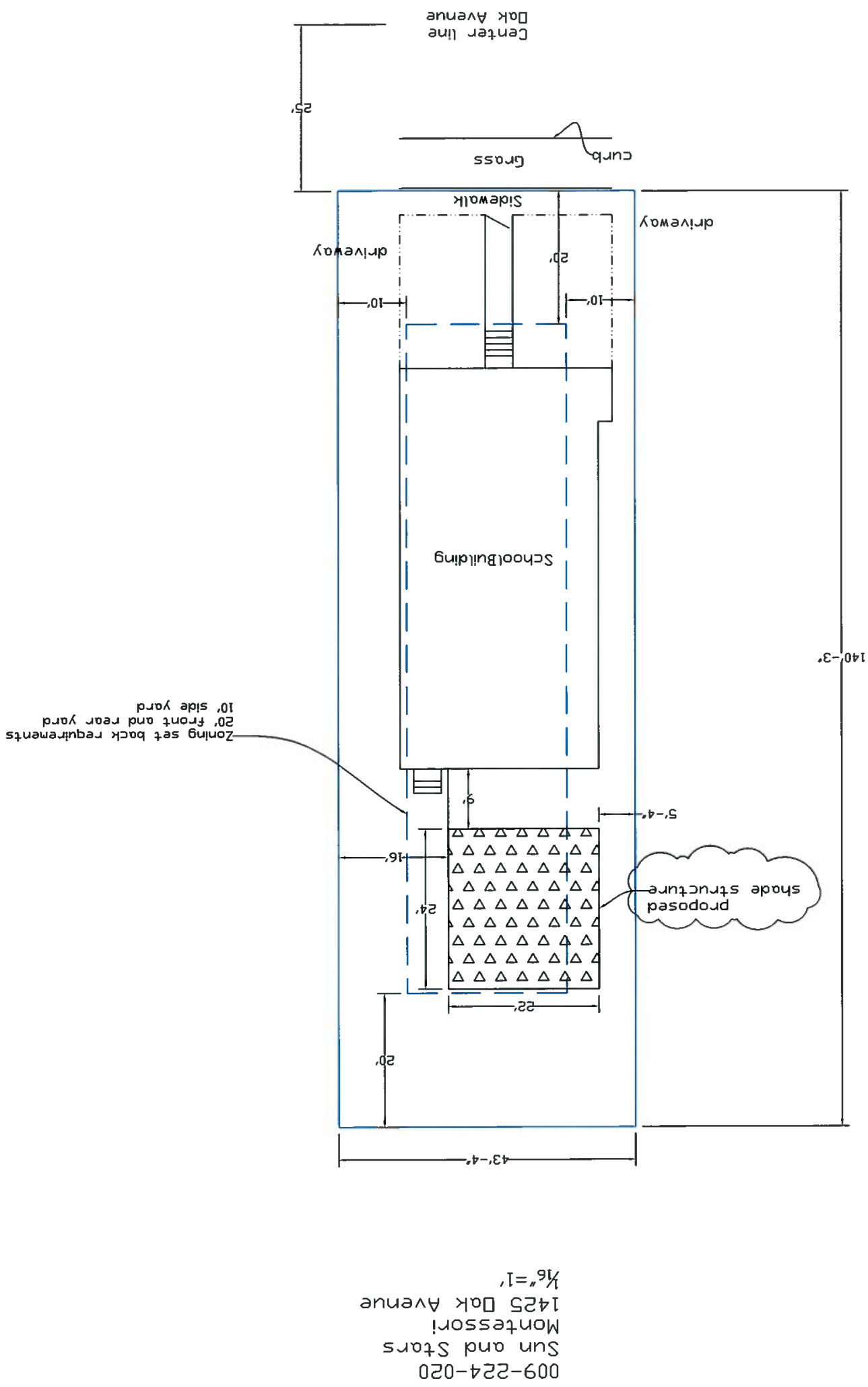

GENERAL NOTES

DESIGN LOADS

BUILDING CODE	TBD
LIVE LOADS	5 PSF
SNOW LOAD	5 PSF
WIND LOADS	90 MPH (3-SEC GUST) EXPOSURE : C

STRUCTURAL STEEL

1.- ALL GALVANIZED STEEL TUBE PRODUCTS ARE MANUFACTURED PER ASTM A500, TYPICAL MECHANICAL PROPERTIES ACHIEVED FOR GALVANIZED TUBE PRODUCTS:

2.- ALL STRUCTURAL SHAPES SHALL BE COLD FORMED HSS ASTM A500 GRADE C, UNLESS OTHERWISE NOTED, TYPICAL MECHANICAL PROPERTIES FOR HSS PRODUCTS:

3.- ALL PLATES PRODUCTS SHALL COMPLY WITH ASTM A572 GRADE 50.

4.- ALL STEEL TUBING SHALL BE TRIPLE COATED FOR RUST PROTECTION USING THE IN-LINE ELECTROPLATING COAT PROCESS. TUBING SHALL BE INTERNALLY COATED WITH ZINC AND ORGANIC COATINGS TO PREVENT CORROSION AS MANUFACTURED BY ALLIED TUBE & CONDUIT.

5.- STRUCTURAL STEEL SHALL BE DETAILED, FABRICATED AND ERECTED IN ACCORDANCE WITH A.I.S.C. SPECIFICATIONS.

6.- ALL SHOP WELDS SHALL BE EXECUTED IN ACCORDANCE WITH THE LATEST EDITION OF THE AMERICAN WELDING SOCIETY (AWS) D1.1 SPECIFICATIONS. ALL WELDS SHALL BE CONTINUOUS WHERE LENGTH IS NOT GIVEN, UNLESS OTHERWISE SHOWN OR NOTED ON DRAWINGS. ALL WELDS SHALL BE MADE USING E70XX ,045 WIRE.

7.- SHOP CONNECTIONS SHALL BE WELDED UNLESS NOTED OTHERWISE. FIELD CONNECTIONS SHALL BE AS INDICATED ON THE DRAWINGS (IF REQUIRED). ALL FILLET WELDS SHALL BE A MINIMUM OF 3/16" UNLESS OTHERWISE NOTED. FIELD WELDS SHALL NOT BE ALLOWED.

8.- ALL HIGH STRENGTH BOLTS SHALL COMPLY WITH ASTM A325 TYPE 1. ALL NUTS SHALL COMPLY WITH ASTM A563DH, AND WASHERS SHALL COMPLY WITH ASTM F436.

9.- ALL HIGH STRENGTH BOLTS SHALL BE TIGHTENED TO A SNUG TIGHT CONDITION.

10.- ALL STRUCTURAL STEEL SHALL BE PAINTED WITH ONE SHOP COAT (2.5 TO 3.5 MILS THICK MIN). THIS COAT IS A WEATHER RESISTANT POWDER COATING BASED ON POLYESTER TGIC (MANUFACTURED BY SHERWIN WILLIAMS OR TIGER DRYLAC). TO ACHIEVE OPTIMUM ADHESION, IT IS RECOMMENDED THAT THE PROPER TREATMENT AND DRYING TAKE PLACE BEFORE COATING. POLYESTER POWDER (TGIC) SPECIFICATIONS SHALL BE AS FOLLOWS:
- PENCIL HARDNESS (ASTM D-3363)
- HUMIDITY (ASTM D-2247)
- SOLVENT RESISTANCE (PCI METHOD) - 50 DBL RUBS SL. SOFTNES

FABRIC SPECIFICATION

1.- FABRIC SHALL BE A HIGH DENSITY POLYETHYLENE WITH ULTRA VIOLET ADDITIVES, WITH MONOFILAMENT AND TAPE CONSTRUCTION GIVING A STABLE MATERIAL AND RACHEL KNITTED TO ENSURE MATERIAL WILL NOT UNRAVEL IF CUT.

2.- FABRIC SPECIFICATIONS:

	SOLID COLORS	STRIPE COLORS	ASTM SPECS
-TEAR STRENGTH	WARP 220.46 LB	WARP 182.98 LB	D2261
	WEFT 462.97 LB	WEFT 401.24 LB	D2261
- BURST STRENGTH	37.71 PSIA	33.07 PSIA	D6797
- FADING	MINIMUM FADING AFTER 5 YEARS		
- LIFE EXPECTANCY	A MINIMUM OF 8 YEARS CONTINUOUS EXPOSURE TO THE SUN		

3.- FIRE TEST ON FABRIC: NFPA 701 TEST 2 AND ASTM E 84
- FLAME SPREAD INDEX (FSI) : 10
- SMOKE DEVELOPED INDEX (SDI) : 50

4.- THREAD-PTFE (TEFLON) USED MEET THE FOLLOWING SPECIFICATIONS: HIGH STRENGTH, LOW SHRINKAGE, WIDE TEMPERATURE RANGE, FLEX & ABRASION RESISTANT AND UV RADIATION IMMUNITY. LOCKSTITCH - 1200 DENIER. CHAINSTITCH THREAD - 2400 DENIER.

AIRCRAFT CABLE

1.- WIRE ROPE CABLE SHALL BE 7x19 STRAND CORE GALVANIZED WIRE ROPE WITH A BREAKING STRENGTH VALUE OF 7,000 LBS (1/4" DIAMETER).

2.- CABLES SHALL BE FED THROUGH THE FABRIC SLEEVES AROUND THE PERIMETER OF THE CANOPY AND TENSIONED UNTIL THE FABRIC PANELS (DESIGNED PURPOSELY UNDERSIZED) REACH A TAUNT APPEARANCE. ANY LONG TERM CABLE SAG SHALL BE MINIMIZED DURING THE MAINTENANCE RE-TIGHTENING VISITS AS REQUIRED.

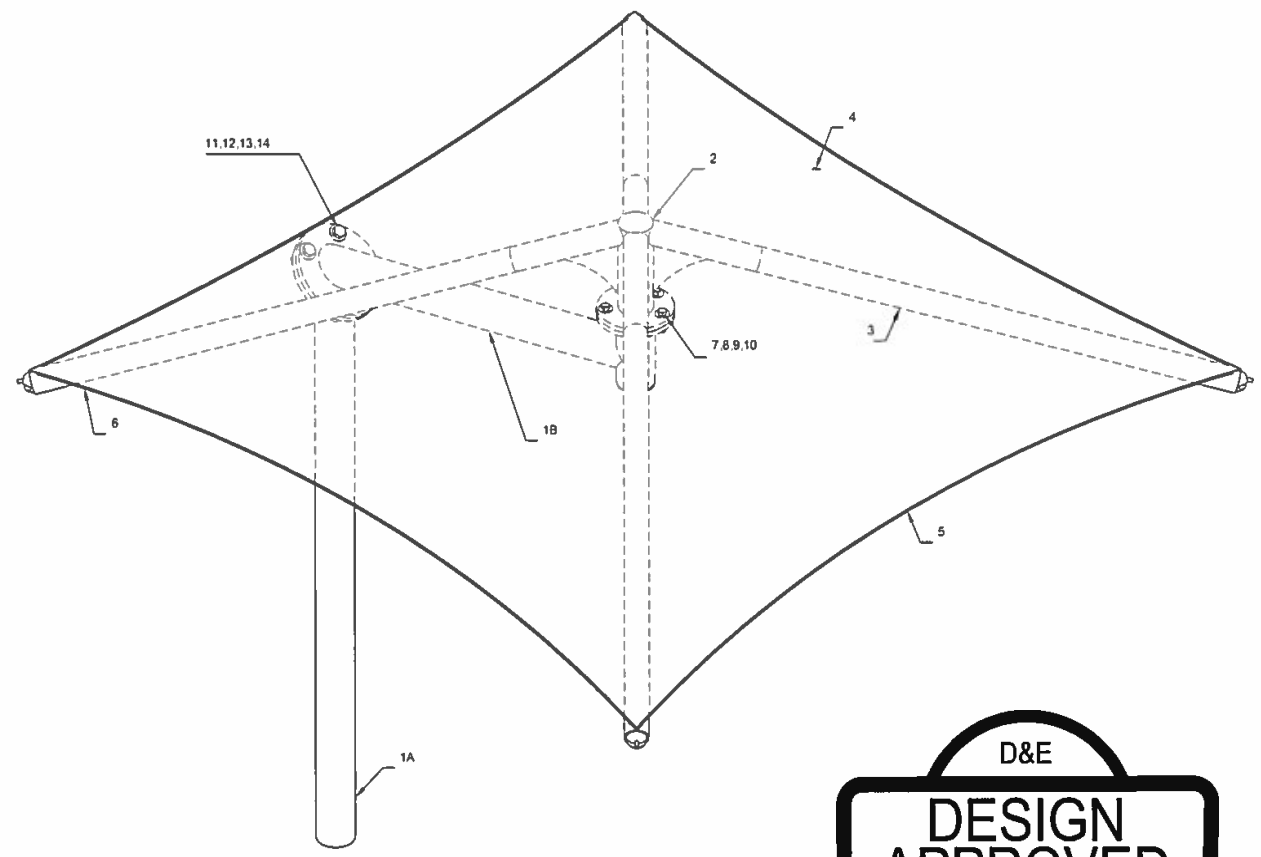

ISOMETRIC VIEW

D&E
DESIGN APPROVED
01/15/14

LIST OF MATERIALS

ITEM	QTY.	DESCRIPTION	MATERIAL/ DWG.	SMI PART No.
1A	1	COLUMN	—	—
1B	1	COLUMN ARM	—	—
2	1	CROWN	—	—
3	4	RAFTER	—	—
4	1	FABRIC TOP	—	—
5	1	STEEL CABLE	—	—
6	4	CABLE CLAMP	—	—
7	5	Ø3/4"-10NC x 3" HEX HEAD BOLT	—	—
8	5	Ø3/4"-10NC NUT	—	—
9	5	Ø3/4" SPLIT LOCK WASHER	—	—
10	10	Ø3/4" FLAT WASHER	—	—
11	4	Ø1"-8NC x 4" HEX HEAD BOLT	—	—
12	4	Ø1"-8NC NUT	—	—
13	4	Ø1" SPLIT LOCK WASHER	—	—
14	8	Ø1" FLAT WASHER	—	—

CODE ANALYSIS

BUILDING	OCCUPANCY	CONSTRUCTION TYPE	AREA (SQF)	OCCUPANT LOAD
SHADE STRUCTURE	U	V-B	TBD	N/A

WARNING.

FABRIC TOP NEEDS TO BE REMOVED IN WINTER 5 PSF OF SNOW MAXIMUM ALLOWED

FABRIC TOP NEEDS TO BE REMOVED IF WINDS EXCEEDING 90 MPH ARE ANTICIPATED

THESE PLANS AND SPECIFICATIONS ARE THE PROPERTY OF USA SHADE AND FABRIC STRUCTURES AND SHALL NOT BE REPRODUCED WITHOUT THEIR WRITTEN PERMISSION.

USASHADE & Fabric Structures

Sun Ports VPS

CORPORATE HEADQUARTERS
8505-A CHANCELLOR ROW
DALLAS, TX. 75247
800-966-5005

CERTIFICATIONS:
IAS CERTIFICATION No: FA-428
CLARK COUNTY MANUFACTURER CERTIFICATION NUMBER (NEVADA): 355

CUSTOMER: CUSTOMER

PROJECT NAME: PROJECT

LOCATION: LOCATION

PROJECT NUMBER. 00000

STRUCTURE TYPE: SINGLE POST PYRAMID CANTILEVER PRODUCT #124.2

SIZE: 00'-0" x 00'-0" x 00'-0"e

SCALE : AS NOTED

DRAWING SIZE: B

REV	DESCRIPTION	DATE	DRW	CHK	ENG
-	DESIGN APPROVED	01/15/14			

Eng. By :	JO	02/06/14
Design By :	JAR	02/06/14
Approved By :	JO	02/06/14

DRAWING DESCRIPTION: NOTES / LOM

DWG. 124.2-I06 (01/15/14)

PAGE 1000

REV. - - -

ISO 124.2-I06 REV 02/15/14

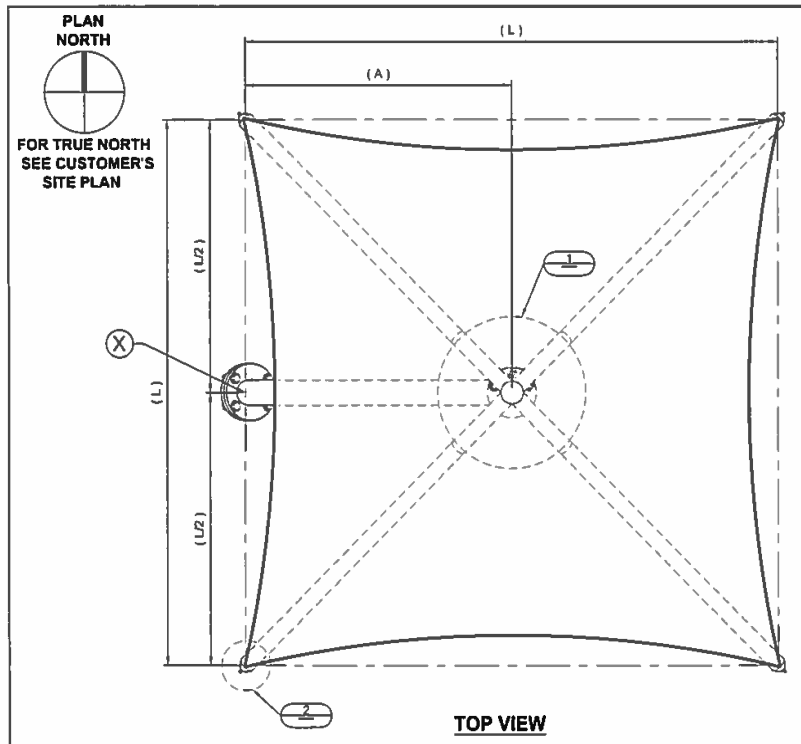

TOP VIEW

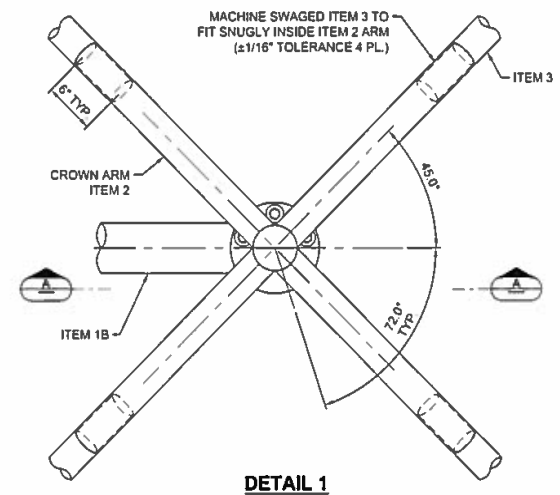

DETAIL 1

(FABRIC OMITTED FOR CLARITY)

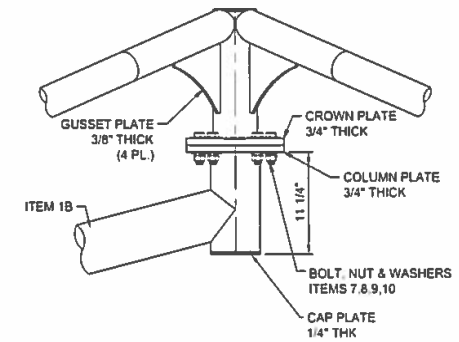

SECTION A-A

(FABRIC OMITTED FOR CLARITY)

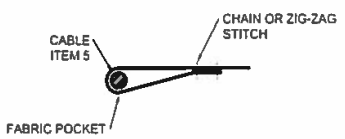

SECTION C-C

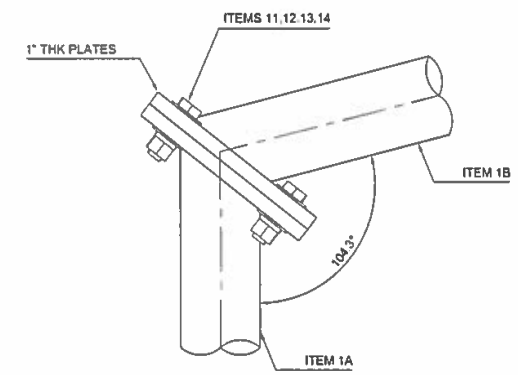

DETAIL 3

TABLE OF DIMENSIONS

(L)	(A)	(H)	(C)	(CH)	(R)	(HT)
TBD	TBD	TBD	TBD	TBD	TBD	TBD

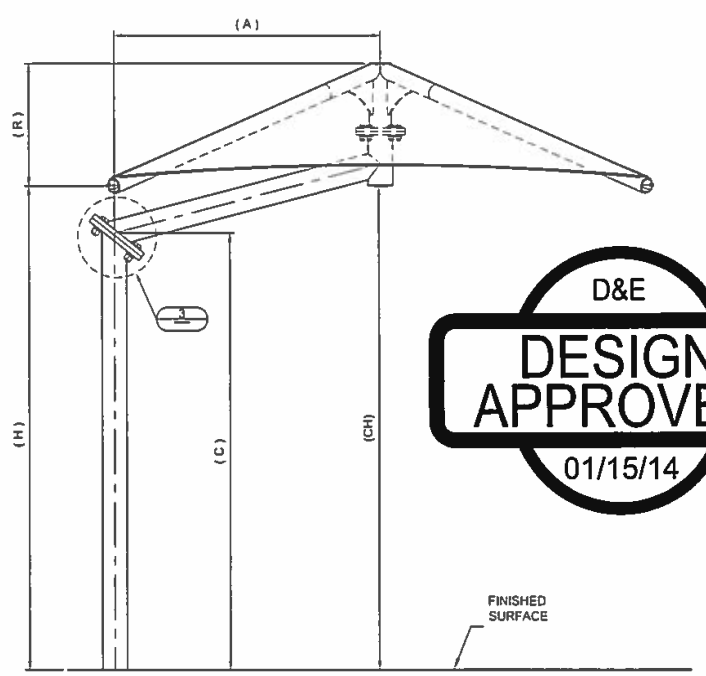

FRONT ELEVATION

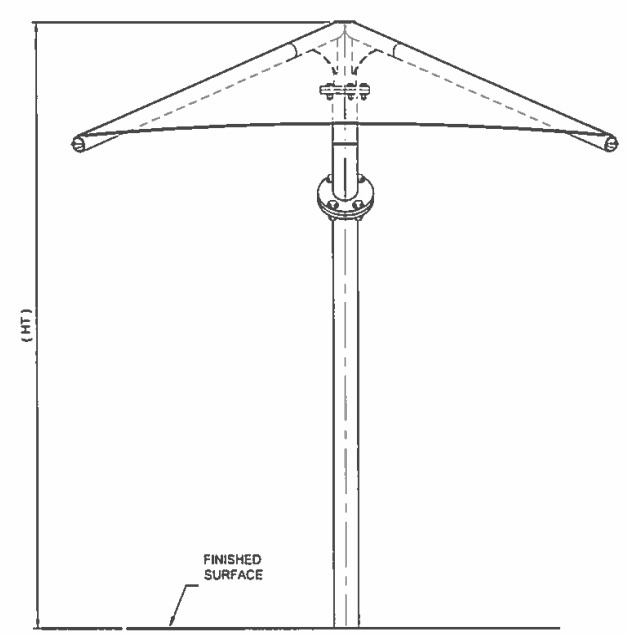

SIDE ELEVATION

D&E
DESIGN APPROVED
01/15/14

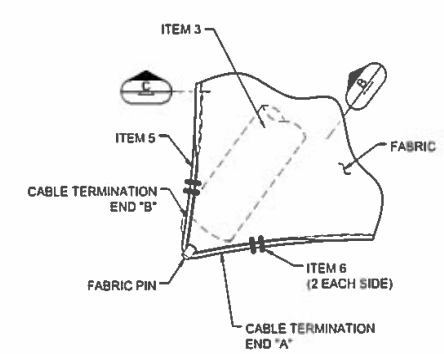

DETAIL 2

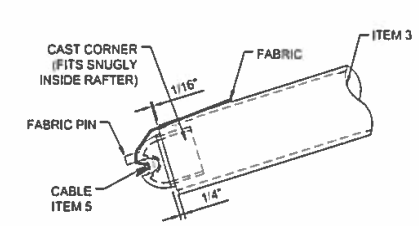

SECTION B-B

THESE PLANS AND SPECIFICATIONS ARE THE PROPERTY OF USA SHADE AND FABRIC STRUCTURES AND SHALL NOT BE REPRODUCED WITHOUT THEIR WRITTEN PERMISSION.

USASHADE & Fabric Structures®

Sun Ports VPS

CORPORATE HEADQUARTERS
8505-A CHANCELLOR ROW
DALLAS, TX. 75247
800-966-5005

CERTIFICATIONS:
IAS CERTIFICATION No: FA-428
CLARK COUNTY MANUFACTURER CERTIFICATION NUMBER (NEVADA): 355

CUSTOMER: CUSTOMER

PROJECT NAME: PROJECT

LOCATION: LOCATION

PROJECT NUMBER: 00000

STRUCTURE TYPE: SINGLE POST PYRAMID CANTILEVER PRODUCT #124.2

SIZE: 00'-0" x 00'-0" x 00'-0"e

SCALE : AS NOTED

DRAWING SIZE: B

REV	DESCRIPTION	DATE	DRW	CHK	ENG
1	DESIGN APPROVED	01/15/14			

Eng. By :	JO	02/06/14
Design By :	JAR	02/06/14
Approved By :	JO	02/06/14

DRAWING DESCRIPTION: VIEWS & DETAILS

DWG. 124.2-I06 (01/15/14)

PAGE 2000

REV. - - -

ISO 124.2-I06 REV 02/10/14

Attachment 3

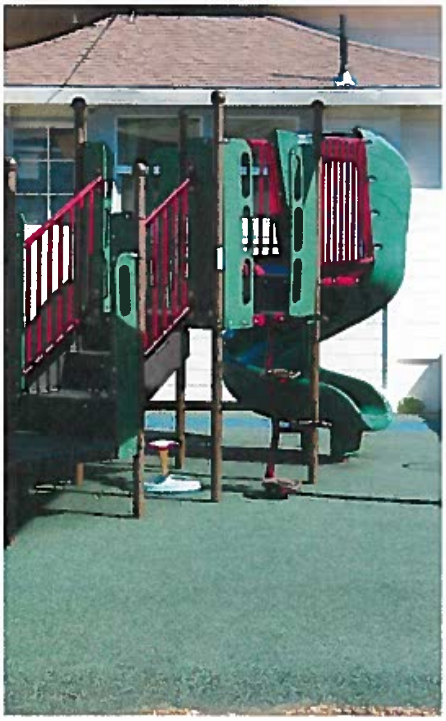

Attachment 4

Sun and Stars Montessori School

September 15, 2016

Dear Mayor Galbraith and City Manager Phillips,

We are writing as concerned parents and invested community members regarding a critical and unresolved issue. The Sun and Stars Montessori School in Saint Helena is a long-standing provider of early education to our youngest citizens with a deep history of community engagement, including participation in Preschool for All. Our children attend the Sun and Stars Montessori School which, for nearly two years, has been attempting to work with the City in good faith to obtain approval for installation of an outdoor shade structure. This structure is intended to provide critically important shade to protect the health of our children's skin. In order to obtain appropriate clearances to proceed with the shade installation, the school's director and board members have been engaged in email correspondence, phone discussions, and in-person meetings with members of the City Administration. These communications have been difficult and unreliable, including inconsistent citations of fees associated with the approval process. Similarly, the plan design our school submitted to the City has received inconsistent and contradictory feedback.

Specifically, the most recent communication in August 2016 from the City indicated that our school must request a "design review exemption", the cost of which represents such a significant portion of the overall project that we will quite literally be priced out of the ability to provide shade to our children. In earlier communications, the Planning and Community Improvement Director assured the school that this fee would be waived due to the nature of the project. Subsequently, he informed the school Director that the fees will indeed be assigned, with the stated reason "After seeing the most recent proposal, it appears to be significantly larger than what was discussed last year." Meanwhile, the most recent proposal exactly matches the size presented to the City last year on October 13, 2015. The Sun and Stars Director and Board President requested an in-person meeting to attempt to resolve this inconsistency and were informed that a mistake had been made due to the Planner having been "new at the job" and the fees were to be applied. At best, this level of unreliability and unprofessionalism in dealing with a local business is surprising. At worst, it is obfuscating a local school's effort to care for the health of the youngest members of our community.

Of course, we understand and respect that the city has rules and regulations by which it must abide. We also understand that, as a nonprofit, the school will be unable to provide more than a nominal fee for getting its request through the legal proceedings of the city. The children in our school, as in others, spend time out-of-doors between the hours of 10 AM and 2 PM. These are, of course, the prime hours for sun over-exposure leading to the development of skin cancers including melanoma, a malignancy with a very high morbidity and mortality rate. Repeated exposure to strong UV rays puts our children at risk. The school itself is ready to proceed and has procured the funding for the shade itself as well as a contractor to properly install it.

We respectfully request an exemption or significant reduction of the requisite fees to erect the structure as well as a streamlined timeline to approval. This is a public health issue as there are at least 45 students exposed unnecessarily on a daily basis. Our county already has a higher than average rate of childhood cancers and we are hopeful that the City will be eager to help us protect some of its most vulnerable citizens

We thank you for your prompt assistance in this matter.

Sincerely,

The families and staff of Sun and Stars Montessori School

1425 Oak Avenue St. Helena, CA 94574
Tel: (707) 967-1984 Fax: (707) 967-1985
e-mail: sunandstarsmontessori@gmail.com

CITY OF ST. HELENA
PLANNING DEPARTMENT 1480 MAIN STREET-ST. HELENA, CA 94574
PLANNING COMMISSION

FEBRUARY 7, 2017

AGENDA SECTION: Sign Permit

AGENDA ITEM: 4.4

FILE NUMBER: PL16-099

SUBJECT: Request by Julie Spencer on behalf of the Rianda House for sign permit approval in order to place a new informational monument sign on the Rianda House property located at 1475 Main Street in the Business and Professional Office (BPO) district.

PREPARED BY: Aaron Hecock, Senior Planner

REVIEWED BY: Noah Housh, Planning Director

APPLICATION FILED: 12/21/2016 **ACCEPTED AS COMPLETE:** 1/12/2017

LOCATION OF PROPERTY: 1475 Main Street

APN: 009-223-002

GENERAL PLAN/ZONING: BPO: Business and Professional Office

APPLICANT: Julie Spencer **PHONE:** (707) 963-8555

PROJECT DESCRIPTION

The applicant is requesting sign permit approval for a new informational monument sign for the Rianda House Senior Activity Center. The proposed sign would be located in the southeast corner of the property (front left from Main Street). The proposed monument sign would be approximately 8' tall x 6'8" wide (post to post) and would be largely constructed of steel tubing anchored into a concrete footing. In addition to containing identifying information such as the Rianda House name and street number, the sign would contain an outdoor aluminum framed enclosed bulletin board with LED lighting. This bulletin board will be used to post notices of events that will take place at the center and in the community. The sign will also be home to several brochure boxes toward the bottom that will accommodate informational fliers and brochures for members of the community to take. As noted, the sign cabinet would be illuminated with LED strips so that the posted information can be read in low-light situations. A condition has been added that only enough lighting to illuminate posted materials shall be used and that light spillover outside of the sign cabinet is not permitted.

ANALYSIS

CEQA

This project is exempt from the requirements of CEQA pursuant to Section 15311 of the CEQA Guidelines, which exempts on-premise business signs.

GENERAL PLAN / ZONING

The project site is located in the Business and Professional Office (BPO) district. The BPO designation provides for professional and administrative offices, medical and dental offices, laboratories, financial institutions, public and quasi-public uses and similar and compatible uses. The existing senior center was established through a use permit in 2005 (#2005-38). In the BPO district, signs are regulated by Municipal Code Section 17.148.040(C)(3). Planning commission approval must be obtained for all signs not listed in Municipal Code Section 17.148.040(C)(3)(a), this includes all illuminated signs. The purpose of the planning commission sign permit is to allow the consideration of illuminated signs (including neon), signs that are larger, or signs in addition to those permitted with an administrative sign permit. The planning commission shall consider the compatibility of the sign to the site, the appropriateness of the materials and colors in relation to the project, the compatibility of the sign to the small town character of St. Helena, and the impact the sign may have on surrounding properties. The commission shall not approve signs which obscure or detract from the architecture of a historic building or structure.

The sign standards detailed in Municipal Code Section 17.148.040(C)(3)(b) specifically apply to the number of signs permitted on the frontages of buildings and therefore do not apply to the sign proposed. The sign proposed is considered a monument sign and is therefore regulated by Section 17.148.070 of the Municipal Code. Monument Signs are defined as “a sign supported by structures or supports that are placed on or anchored in the ground that are independent from any building or other structure.” Section 17.148.070 requires the following:

A. All monument signs shall be located on the property served by the sign; off-premises signs are not permitted.

B. The maximum height of a monument sign shall be eight feet, as measured from the base of the sign at normal grade to the top of the highest attached component of the sign. Normal grade shall be considered to be the grade after construction exclusive of any filling, berming, mounding, or excavating for landscaping or for the purpose of locating the sign.

C. Monument signs shall be located no closer to the right-of-way than one-half the distance of a required front or side setback. Use permit approval shall be required for any request to locate a monument sign closer to the right-of-way than is permitted above.

<u>Staff Response</u>: The proposed monument sign is located on the property served by the sign and has a maximum height of 8 feet. The BPO district requires a 20 foot front setback, therefore, the monument sign is required to be setback at least 10 feet from

the front property line. As detailed on the attached plans, the proposed sign is setback approximately 12'9"; therefore, the proposed sign meets all development standards relating to the placement of a new monument sign.

CORRESPONDENCE

As of the completion of this report, no comments on the proposed signs have been received by staff.

STAFF RECOMMENDATION

Staff feels the sign is well designed and well placed and is in support of the application. Therefore, staff recommends that the Planning Commission:

1. Determine that the signs are exempt from the requirements of CEQA pursuant to Section 15311, Class 11(a) of the CEQA Guidelines which exempts on-premise business signs; and
2. Approve the request for a Sign Permit in order to place a new, illuminated, monument sign on the property located at 1475 Main Street.

ATTACHMENTS

1. Resolution / Conditions of Approval
2. Sign Exhibits

CITY OF ST. HELENA, STATE OF CALIFORNIA
SIGN PERMIT NO. PL17-
GRANTED TO 1475 MAIN STREET

PROPERTY OWNER: Rianda House **APN:** 009-223-002

RECITALS

1. The applicant requests a sign permit in order to place a new informational monument sign on the Rianda House property located at 1475 Main Street in the Business and Professional Office (BPO) district.
2. New signage proposed includes a new, illuminated, monument sign located in the southeast corner of the property off Main Street.
3. The Planning Commission of the City of St. Helena, State of California, considered the sign, staff report, and all testimony, written and spoken, at a hearing on February 7, 2017.

RESOLUTION

The Planning Commission of the City of St. Helena, State of California, approved the Sign Permit on the following basis:

A. In making the findings in this Resolution, the Planning Commission relied upon and hereby incorporates by reference all of the documents referenced in this Resolution and the associated staff reports, City files for this matter, correspondence, presentations and other materials.

B. The Planning Commission hereby finds that this project is exempt from the California Environmental Quality Act pursuant to Section 15311, Class 11 (a), which exempts installation of on premise signs.

C. The Planning Commission hereby finds that the proposed signs are in compliance with the requirements of Municipal Code Section 17.148 relating to the placement of signs in the Business and Professional Office district.

D. The Sign Permit for the above described is granted subject to compliance with the following conditions. The conditions noted below are particularly pertinent to this permit and shall not be construed to permit violation of other laws and policies not so listed:

1. The permit shall be in conformance with all City ordinances, rules, regulations and policies in effect at the time of issuance of a building permit should one be required.
2. The Permit shall be vested within one (1) year from the date of approval. The Permit may be extended for up to two (2) one-year periods pursuant to the St. Helena Municipal Code, Section 17.08.130, Extension of Permits and Approvals. Any request for an extension of the Sign Permit must be justified in writing and received by the Planning Department at least thirty (30) days prior to expiration.

3. This permit will expire if the use is discontinued pursuant to existing ordinances and regulations.
4. In any action or proceeding to attack, challenge, invalidate, set aside, void or annul the City's approval of applicant's Project, in whole or in part, applicant shall defend, at its own expense and without any cost to the City, and with counsel acceptable to the City, and shall fully and completely indemnify and hold the City, its agents, officers, and employees harmless from and against any and all claims, causes of action, damages, costs, attorney's fees and liability of any kind, so long as the City reasonably promptly notifies the applicant of any such claim, action, or proceedings and the City cooperates fully in the defense of the action or proceedings.
5. This Sign Permit shall run with the land and shall be binding upon all parties having any right, title or interest in the real property or any part thereof, their heirs, successors and assigns, and shall inure to their benefit and benefit of the City of St. Helena.
6. The sign authorized by this Sign Permit shall conform to the details and dimensions shown on the Exhibits which were reviewed and approved by the Planning Commission at their February 7, 2017 meeting.
7. Only enough lighting to illuminate posted materials shall be used; light spillover outside of the sign cabinet is not permitted.
8. An Encroachment Permit shall be obtained by the applicant prior to installation of the sign if work involves locating of any person or structure on public property, such as a sidewalk, driveway, or street, if necessary.
9. Provided they are in general compliance with the Sign Ordinance, minor modifications may be approved by the Planning Director.

I HEREBY CERTIFY that the foregoing sign permit was duly and regularly approved by the Planning Commission of the City of St. Helena at a regular meeting of said Planning Commission held on February 7, 2017 by the following roll call vote:

AYES:
NOES:
ABSENT:
ABSTAIN:

APPROVED:	ATTEST:
_____	_____
Grace Kistner Chair, Planning Commission	Noah Housh Planning Director

1475 Main Street
Sign Permit
February 7, 2017

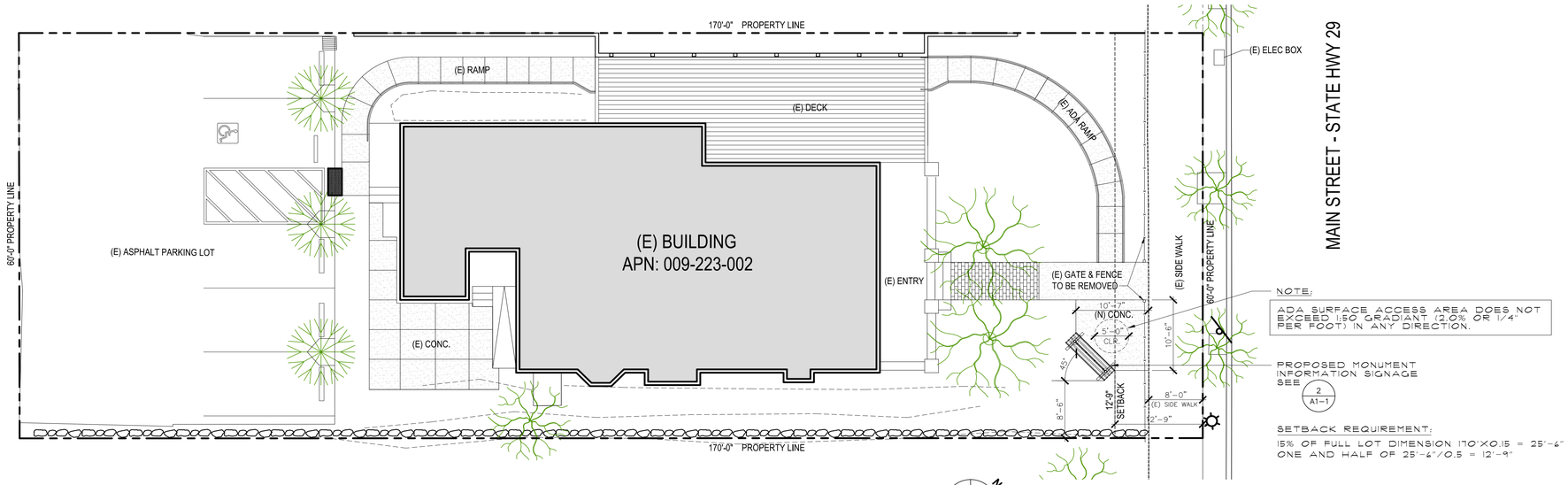

NOTE:

ADA SURFACE ACCESS AREA DOES NOT EXCEED 1:50 GRADIANT (2.0% OR 1/4" PER FOOT) IN ANY DIRECTION.

PROPOSED MONUMENT INFORMATION SIGNAGE SEE 2 / A1-1

SETBACK REQUIREMENT:

15% OF FULL LOT DIMENSION 170'X0.15 = 25'-6"
ONE AND HALF OF 25'-6"/0.5 = 12'-9"

1 SITE PLAN

SCALE: 1/8"=1'-0"

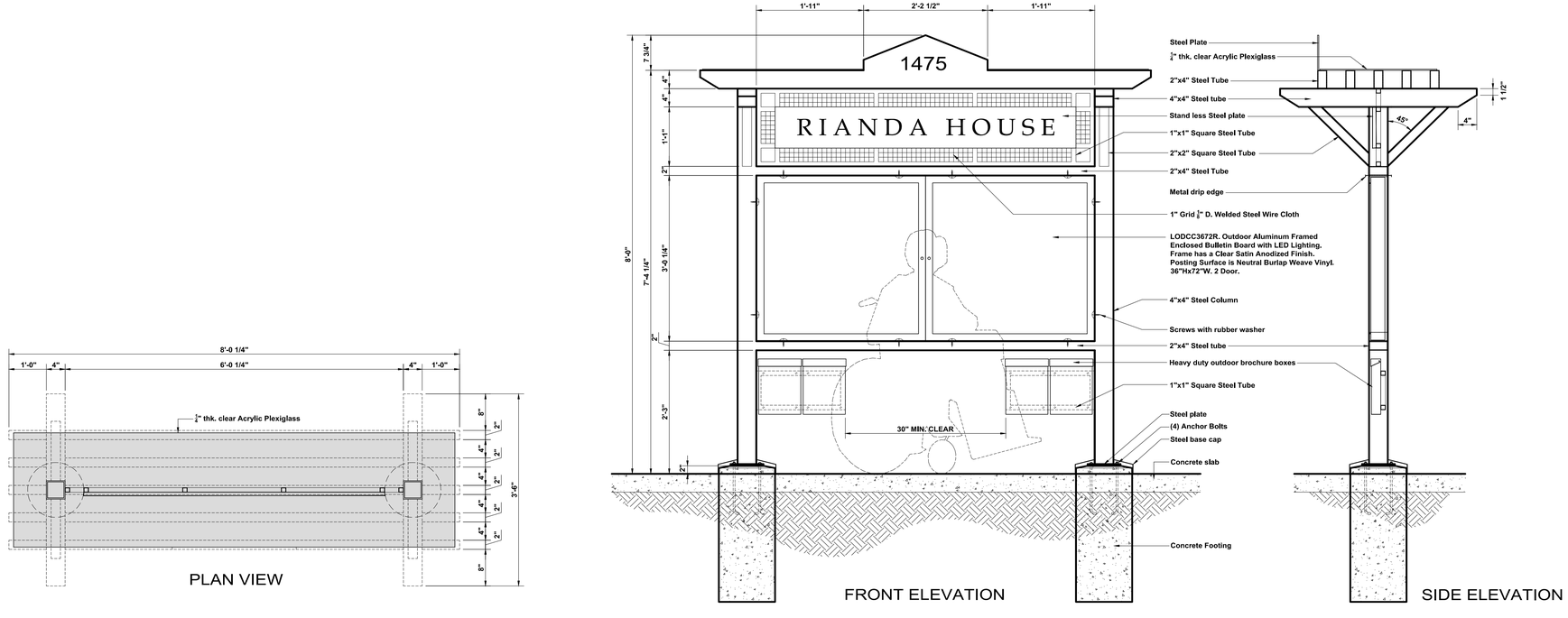

2 SIGNAGE DETAIL

SCALE: 1"=1'-0"

LAIL DESIGN GROUP

1505 Main Street St. Helena, CA 94574
TEL 707 963 1565 FAX 707 963 4509

JON LAIL
PROJECT DESIGNER

JULIE SPENSER
CONTACT PERSON
707-963-8555
julie@riandahouse.org

These drawings are the property of Lail Design Group, Inc. and have been prepared specifically for this project. These drawings are not to be used for any other project, by any other entity or in another location.
Copyright 2017 Lail Design Group, Inc.

RIANDA HOUSE

SENIOR ACTIVITY CENTER

MONUMENT INFORMATION SIGNAGE

1475 MAIN STREET
ST. HELENA, CA 94574
APN: 009-223-002-000

PROJECT NUMBER	
DATE	01.12.2017
CHECKED BY	JL
DRAWN BY	CV
SCALE	AS NOTED

REVISIONS

MONUMENT INFORMATION SIGNAGE

A1-1

PERMIT SUBMITTAL

CITY OF ST. HELENA
PLANNING DEPARTMENT 1480 MAIN STREET- ST. HELENA, CA 94574
PLANNING COMMISSION
Adams Street Residence Design Review
February 7, 2017

AGENDA SECTION: Public Hearing

AGENDA ITEM: 5.1

FILE NUMBER: PL16-080

SUBJECT: Adams Street Design Review

PREPARED BY: Lilly Bianco, Associate Planner

REVIEWED BY: Noah Housh, Planning Director

APPLICATION FILED: Oct 13, 2016 **ACCEPTED AS COMPLETE:** Jan 23, 2017

LOCATION OF PROPERTY: 1405 Adams Street

APN: 009-304-013

GENERAL PLAN/ZONING: MR: Medium Density Residential

APPLICANT: Lauren Gaffney of Wade Design **PHONE:** (415) 484-1760

PROPERTY DESCRIPTION

The subject property is a vacant residential lot of approximately 0.21 acres (8,629 sf) situated on the western corner of Adams Street and Allyn Avenue. The property is zoned MR: Medium Density Residential. At present, the site exhibits ruderal habitat and a few trees located along the site's periphery.

PROJECT DESCRIPTION

Applicant, Lauren Gaffney of Wade Design Architects, is requesting Design Review Approval on behalf of property owners, George Duran and Joseph Pon, to construct a new single family residence with attached accessory dwelling, swimming pool, landscaping, and other appurtenant improvements at 1405 Adams Street in St. Helena. The total enclosed square footage would amount to 3,095 square feet.

The proposed residence and attached accessory dwelling (ADU) exhibit a traditional form and style. The residence and ADU would be two stories in height and would feature a variation in wall planes, wraparound porch, and multi-gabled roof. Wall cladding would be painted wood. The Main House would feature horizontal ship lap siding, whereas the ADU would feature v shingle siding, and the detached garage

would be clad in cove siding. All structures are unified with similar paint and trim color choices, as well as wood clad doors and windows facing the street. To provide a greater level of visual interest, the residence would include St. Helena Cottage Wall Stone at chimney, low walls and porch, and warm grey standing seam roof at low slope roofs and a diamond-pattern shingle at the higher slope roofs. The maximum height measured at the peak of the roof would be 24 - 4$^{1/2}$"

A total landscape area of 3,633 square feet is proposed and would consist predominantly of medium water use plantings with a few low water use plantings. Hardscape will include gravel and concrete pavers. All proposed landscaping is in compliance with the MWELO provisions as confirmed by the Director of Public Works.

An 8' wood fence would extend around the rear and interior side yard property lines with a low, 2' wood fence flanking a 3' tall wooden gate located along a portion of the property frontage. To accommodate new landscaping, the applicant proposes the removal of a white oak (11" dbh), live oak (9"dbh), and four camphor trees (5-7"dbh).

ANALYSIS

GENERAL PLAN

The property has a General Plan of Medium Density Residential, providing for single-family detached homes, accessory dwelling units and other compatible uses. The construction of one single-family home is a permitted use under this land use designation. The MDR designation is the predominant residential designation, occurring throughout large areas of the City. The wide distribution of this designation is intended to maintain a development pattern in newly developing areas that is consistent with historic development patterns.

Relevant General Plan Policies include:

2.6.4 *Permit infill development and higher densities within currently developed areas wherever possible to minimize and postpone the need for expansion of the urban service area*

4.3.4 *Strengthen community identity by appropriate building design, size, and site landscaping.*

4.3.5 *Require future residential development to conform to the pattern and density of older, neighboring areas of town in order to complement existing town character and ensure that densities are high enough to protect against unnecessary incursion into vineyard agricultural areas.*

4.3.25 *Within the primary urban area of St. Helena, encourage variety in housing types and density consistent with those found in the older neighborhoods of town. Encourage varying lot widths and configuration, but limit the allowable building envelope by parcel size to avoid overbuilt conditions.*

4.3.26 *Encourage residential building siting and design that is similar to that found in older neighborhoods in town. In these areas consistent setbacks, porches, and generously landscaped front yards add to community enjoyment by all. Restrict location of driveways and garages to minimize their visual impact on the street.*

4.3.27 *Encourage large specimen street trees and generous landscaping to shade homes and the street and to link various neighborhoods.*

4. 4.3 *Driveway and garages should be as unobtrusive as possible, with garages preferably located at the rear of the lot.*

Staff Analysis:
The proposed residence is consistent with the policies enumerated above. As infill development in an already urbanized area, it exhibits ready access to utilities and services, which in turn reduces pressure on areas outside of the urban service area. The design of the proposed residence gives a nod to traditional building forms and exhibits detailing reflective of St. Helena's established character (i.e. painted wood siding, St. Helena Cottage Wall stone, and standing seam roof) which further strengthens the neighborhood identity and complements other residences in the area. Further, the siting and configuration of the residence is generally consistent with that of the neighborhood. Last, generous landscaping proposed around the property frontage and street site setback that includes shrubs and trees will soften the look of the new residence and provide continuity with other lots. Accordingly, the project appears to be consistent with applicable General Plan policies.

ZONING
Consistent with the GP land use designation, 1405 Adams Street exhibits a zoning designation of MR: Medium Density Residential. The MR zoning designation allows for single-family detached homes, accessory dwelling units, limited agricultural use and other compatible uses insofar as they conform to the development standards prescribed by Municipal Code Section 17.40.060.

Under Zoning Code Section 17.40.070, an 8,629 sf parcel is allowed a maximum floor area of 0.324, which equates to a maximum of 2,796 max gross floor area (exclusive of any exemptions). Accordingly, the applicant is proposing a total floor area of approximately 3,095 SF (net total of 2495 SF *with exemptions*) or an F.A.R of 0.289 which is below the maximum permitted, as detailed below.

NET FLOOR AREA:

MAIN DWELLING	2254 SF
ADU	563 SF
GARAGE	278 SF
COVERED PARKING EXEMPTION	***- 200 SF***
ADU EXEMPTION	***- 400 SF***
TOTAL	2495 SF

FLOOR AREA RATIO: 2,495 /8629 = **0.289**

Staff Analysis:
As proposed, staff finds that the residence meets all development criteria including height, setback, parking and floor area criteria prescribed by Section 17.40.060. The residence will exhibit a minimum setback of 20' at the front, rear, and street side setback and 10' at the interior side yard. Consistent with allowances provided under Municipal Code Section 17.112.060 (B), the wraparound porch will encroach into the setback by 6'. Similarly, the detached garage will exhibit a 3' interior side yard setback as authorized under Municipal Code Section 17.116.030C. The maximum height as measured at the ridge of the roof will be approximately 24' 4$^{1/2}$".

ACCESSORY DWELLING UNITs
To make it easier for property owners to create Accessory Dwelling units, Governor Brown signed AB 2299 and SB 1069 into law, thereby amending Government Code Section 65852.2. As amended, Government Code Section 65852.2 further limits public agencies ability to regulate Accessory Dwelling Units.

To the extent that a City's ordinance imposes requirements beyond those enumerated in the state law, those local provisions are preempted as of January 1, 2017, and only state standards may be enforced. Review of the amended Government Code Section 65852.2 indicates that the proposed Accessory Dwelling Unit complies with all applicable standards, namely that it will be located within a single family residential zone, will be attached to a single family residential unit, provides independent exterior access, and the side and rear setbacks are sufficient to ensure fire safety. Similarly, while no longer applicable (under the revised State Law), the project does comply with those provisions outlined in St. Helena Zoning Code Section 17.116.030. As such, the project is found to be in compliance with all applicable regulations in effect at the time of review.

WATER
In August 2015 and pursuant to Ordinance 2015-5 the City of St. Helena established mandatory water efficiency measures for new construction, and adopted water demand offset requirements enumerated in Chapter 13.12.050 of the Municipal Code. Amongst these provisions is the requirement that any "new development" (i.e. construction that would introduce any freestanding building that contains water-using fixtures, any floor area additions to existing nonresidential structures; or any residential additions or remodeling that increases the number of independent living units) offset new demand by an amount of water equal to the new demand on the city water system using the methodology defined in Section 13.12.050. The offset must be clearly demonstrated, to the satisfaction of the Director of Public Works.

Accordingly, the applicant provided a water neutrality analysis. The proposed total water usage (internal and external) is estimated to be 232 gallons per day (this is exclusive of the proposed pool which may *not* be filled with City water). As the baseline water use of the site is 0, the applicant must perform offsite retrofits so as to reduce water usage elsewhere at a level commensurate with the project's anticipated water use. Accordingly, the applicant has proposed to retrofit the lavatory toilets and sinks in the

St. Helena Safeway; the offsite retrofits are projected to generate a water savings of 357 gpd. This would mean a net decrease in citywide water use of 125 gpd. Given the net decrease in overall citywide water use, the project is determined to be consistent with the water neutrality provisions.

GROWTH MANAGEMENT

The City of St. Helena has a Residential Growth Management System (GMS) that limits the number of residential building permits that can be issued each year (Municipal Code Chapter 17.152). The stated purpose of the GMS is to regulate the residential growth of the City to approximately 2% per year, while providing for both market rate and affordable housing. Generally, permits are regulated for market rate housing and not for exempt categories of development including all non-residential development (including hotels), replacement or relocated housing, additions, guest cottages, second units and affordable housing. According to the GMS, no more than nine (9) building permits for market rate housing may be issued each year. So far in 2017, four units have been assigned; this project would constitute the fifth and there would be four permits remaining. Accordingly, there are adequate allotments available to accommodate this project.

DESIGN REVIEW

The purpose of design review is to, amongst other things, promote the qualities that bring value to the community and foster attractiveness and functional utility of the community as a place to live and work. To approve design review, the Commission must find that the project is consistent with the design criteria prescribed by Section 17.164.030 and exhibits a quality of design that is compatible with adjacent development, features a siting, scale, massing and architectural style that is generally consistent with the predominant development patterns and that does not otherwise detract or negatively affect the established character of the surrounding neighborhood.

The immediate vicinity is a well-established neighborhood and features traditional building forms and styles of relatively modest size. Most property frontages feature landscaping and vegetative screening. The proposed residence will feature a traditionally-inspired design, will exhibit variations in wall plane, and will be capped with an irregular roof featuring multiple gables which is generally consistent with nearby residences. Landscaping, including a variety of trees, will be installed at property frontage to soften and screen the proposed residence at a level consistent with that exhibited by the surrounding neighborhood. Accordingly, the project appears to be of a design consistent with the character of the established neighborhood and meets the Design Review criteria outlined below and as further described below in *italic typeface*.

1. Consistency and compatibility with applicable elements of the general plan;
   As described above, under "General Plan analysis," the project is consistent with applicable goals of the General Plan.

2. Compatibility of design with the immediate environment of the site;
   The proposed residence will feature a traditionally-inspired design, will exhibit variations in wall plane, and will be capped with an irregular roof featuring multiple gables which is generally consistent with nearby residences.

3. Relationship of the design to the site;
   The siting and configuration of the proposed residence is generally consistent with that of the neighborhood and generous landscaping proposed around the property frontage and street site setback that includes shrubs and trees will soften the look of the new residence and provide continuity with other lots.

4. Determination that the design is compatible in areas considered by the board as having a unified design or historical character;
   As stated above, the proposed residence will feature a traditionally-inspired design, will exhibit variations in wall plane, and will be capped with an irregular roof featuring multiple gables which is generally consistent with nearby residences.

5. Whether the design promotes harmonious transition in scale and character in areas between different designated land uses;
   The design of the proposed residence gives a nod to traditional building forms and exhibits detailing reflective of St. Helena's established character (i.e. painted wood siding, St. Helena Cottage wall stone, and standing seam roof) which further strengthens the neighborhood identity and complements other residences in the area.

6. Compatibility with future construction both on and off the site;
   The design of the proposed residence gives a nod to traditional building forms and exhibits detailing reflective of St. Helena's established character (i.e. painted wood siding, St. Helena Cottage Wall stone, and standing seam roof) which further strengthens the neighborhood identity and complements other residences in the area and is expected to be compatible with any future development in the area.

7. Whether the architectural design of structures and their materials and colors are appropriate to the function of the project;
   The design of the proposed residence gives a nod to traditional building forms and exhibits detailing reflective of St. Helena's established character (i.e. painted wood siding, St. Helena Cottage Wall stone, and standing seam roof) which further strengthens the neighborhood identity and complements other residences in the area.

8. Whether the planning and siting of the various functions and buildings on the site create an internal sense of order and provide a desirable environment for occupants, visitors and the general community;
   The siting and configuration of the residence is generally consistent with that of the neighborhood. Last, generous landscaping proposed around the property frontage and street site setback that includes shrubs and trees will soften the look of the new residence and provide continuity with other lots.

9. Whether the amount and arrangement of open space and landscaping are appropriate to the design and the function of the structures;

The siting and configuration of the residence is generally consistent with that of the neighborhood. Last, generous landscaping proposed around the property frontage and street site setback that includes shrubs and trees will soften the look of the new residence and provide continuity with other lots.

10. Whether sufficient ancillary functions are provided to support the main functions of the project and whether they are compatible with the project's design concept;
 The proposed residence is located within the UGB and is well served by public utilities and services.

11. Whether access to the property and circulation systems are safe and convenient for pedestrians, cyclists and vehicles;
 Site access will not substantially change and would not inhibit safe and convenient pedestrian, bicycle or vehicular access in the vicinity of the subject site.

12. Whether natural features are appropriately preserved and integrated with the project;
 Existing natural features will be integrated into the site design to the extent feasible. As a vacant residential lot, the important natural features requiring preservation are limited. The project will introduce a full landscaping plan so as to ensure an appropriate level of vegetation commensurate with that exhibited throughout the rest of the neighborhood.

13. Whether the materials, textures, colors and details of construction are an appropriate expression of its design concept and function and whether they are compatible with the adjacent and neighboring structure and functions;
 All structures are unified with similar paint and trim color choices, as well as wood clad doors and windows facing the street. The proposed materials, colors, and design elements are traditionally-inspired and are readily consistent with those typified by other residential buildings in the neighborhood.

14. In areas considered by the board as having a unified design character or historical character, whether the design is compatible with such character;
 As stated above, the design will feature materials, colors, and a design that is typical of the neighborhood and consistent with traditional building forms and therefore will be compatible with the established character.

15. Whether the landscape design concept for the site, as shown by the relationship of plant masses, open space, scale, plant forms and foliage textures and colors create a desirable and functional environment and whether the landscape concept depicts an appropriate unity with the various buildings on the site;
 Generous landscaping proposed around the property frontage and street site setback that includes shrubs and trees will soften the look of the new residence and provide continuity with other lots at a level commensurate with that exhibited by other properties in the neighborhood.

16. Whether plant material is suitable and adaptable to the site, capable of being properly maintained on the site, and is of a variety which is suitable to the climate of St. Helena.
    Proposed landscaping would include such plants as Japanese maple, Chinese Pistache, Northern white cedar, pyramidal European hornbeam, as well as smaller plantings of boxwood hedge, lavender, catmint, Mendocino reed grass, amongst others. The proposed vegetation is common throughout this region and readily adaptable to the climate and capable of being easily maintained.

17. Whether sustainability and climate protection are promoted through the use of green building practices such as appropriate site/architectural design, use of green building materials, energy efficient systems and water efficient landscape materials.
    The proposed residence will use energy and water efficient fixtures and, given that it is located in an area within walking distances to commercial uses and public amenities, it will further sustainability goals and help achieve climate protection goals.

CEQA

The project is exempt from the requirements of CEQA pursuant to Section 15303, which exempts the construction single-family residences, amongst other things.

CORRESPONDENCE

As of the completion of this report staff had received no letters in support or opposition to this application.

STAFF RECOMMENDATION

Staff finds that the proposed configuration of the site, the overall design elements and proposed materials/finishes are in character with the neighborhood and the community in general. Because of this staff concludes that design review findings can be made and recommends that the Planning Commission:

1. Determine that the project is exempt from the requirements of CEQA, pursuant to Section 15303, which exempts the construction single-family residences.

2. Accept the required findings and grant design review approval for the Adams Street Residence at 1405 Adams Street.

ATTACHMENTS

1. Resolution
2. APN Map
3. Aerial Photo
4. Project Plans and Photos
5. Water Neutrality Analysis

CITY OF ST. HELENA PLANNING COMMISSION

RESOLUTION NO. x

RESOLUTION OF THE PLANNING COMMISSION OF THE CITY OF ST. HELENA GRANTING APPROVAL OF DESIGN REVIEW FOR THE ADAMS STREET RESIDENCE LOCATED AT 1405 ADAMS STREET

PROPERTY OWNER: George Duran & Joseph Pon **APN:** 009-304-013

Recitals

1. Request by Lauren Gaffney of Wade Design for Design Review approval to construct a new single-family residence at 1405 Adams Street and in the MR: Medium Density Residential District.
2. The Planning Commission of the City of St. Helena, State of California, held a duly noticed public hearing on February 7, 2017.

Resolution

A. The Planning Commission hereby finds that the project is exempt from CEQA pursuant to 15303, which exempts the construction of small structures including single-family residences, garages, pools, etc.

B. The Planning Commission finds that the project site is located in a well-established neighborhood which features traditional building forms and styles of relatively modest size. Most property frontages feature landscaping and vegetative screening. The proposed residence will a traditionally-inspired design, will exhibit variations in wall plane and will be capped with an irregular roof featuring multiple gables which is generally consistent with nearby residences. Generous Landscaping, including a variety of trees, will be installed at property frontage to soften and screen the proposed residence at a level consistent with that exhibited by the surrounding neighborhood. Recognizing that the project is of a design consistent with the character of the established neighborhood, the Planning Commission hereby determines that the project is in compliance with the following Design Review criteria of Municipal Code Section 17.164.030 in the following ways:

1. Consistency and compatibility with applicable elements of the general plan;
   As infill development in an already urbanized area, it exhibits ready access to utilities and services, which in turn reduces pressure on areas outside of the urban service area. The design of the proposed residence gives a nod to traditional building forms and exhibits detailing reflective of St. Helena's established character (i.e. painted wood siding, St. Helena Cottage Wall stone, and standing seam roof) which further strengthens the neighborhood identity and complements other residences in the area. Further, the siting and configuration of the residence is generally consistent with that of the neighborhood. Last, generous landscaping proposed around the property frontage and street site setback that includes shrubs and trees will soften the look of the new residence

and provide continuity with other lots. Accordingly, the project appears to be consistent with applicable General Plan policies including 2.6.4, 4.3.4, 4.3.5, 4.3.25, 4.3.26, 4.3.27, and 4.4.3, amongst others.

2. Compatibility of design with the immediate environment of the site;
   The proposed residence will feature a traditionally-inspired design, will exhibit variations in wall plane, and will be capped with an irregular roof featuring multiple gables which is generally consistent with nearby residences.

3. Relationship of the design to the site;
   The siting and configuration of the proposed residence is generally consistent with that of the neighborhood and generous landscaping proposed around the property frontage and street site setback that includes shrubs and trees will soften the look of the new residence and provide continuity with other lots.

4. Determination that the design is compatible in areas considered by the board as having a unified design or historical character;
   As stated above, the proposed residence will feature a traditionally-inspired design, will exhibit variations in wall plane, and will be capped with an irregular roof featuring multiple gables which is generally consistent with nearby residences.

5. Whether the design promotes harmonious transition in scale and character in areas between different designated land uses;
   The design of the proposed residence gives a nod to traditional building forms and exhibits detailing reflective of St. Helena's established character (i.e. painted wood siding, St. Helena Cottage wall stone, and standing seam roof) which further strengthens the neighborhood identity and complements other residences in the area.

6. Compatibility with future construction both on and off the site;
   The design of the proposed residence gives a nod to traditional building forms and exhibits detailing reflective of St. Helena's established character (i.e. painted wood siding, St. Helena Cottage Wall stone, and standing seam roof) which further strengthens the neighborhood identity and complements other residences in the area and is expected to be compatible with any future development in the area.

7. Whether the architectural design of structures and their materials and colors are appropriate to the function of the project;
   The design of the proposed residence gives a nod to traditional building forms and exhibits detailing reflective of St. Helena's established character (i.e. painted wood siding, St. Helena Cottage Wall stone, and standing seam roof) which further strengthens the neighborhood identity and complements other residences in the area.

8. Whether the planning and siting of the various functions and buildings on the site create an internal sense of order and provide a desirable environment for occupants, visitors and the general community;
   The siting and configuration of the residence is generally consistent with that of the neighborhood. Last, generous landscaping proposed around the property frontage and street site setback that includes shrubs and trees will soften the look of the new residence and provide continuity with other lots.

9. Whether the amount and arrangement of open space and landscaping are appropriate to the design and the function of the structures;
   The siting and configuration of the residence is generally consistent with that of the neighborhood. Last, generous landscaping proposed around the property frontage and street site setback that includes shrubs and trees will soften the look of the new residence and provide continuity with other lots.

10. Whether sufficient ancillary functions are provided to support the main functions of the project and whether they are compatible with the project's design concept;
    The proposed residence is located within the UGB and is well served by public utilities and services.

11. Whether access to the property and circulation systems are safe and convenient for pedestrians, cyclists and vehicles;
    Site access will not substantially change and would not inhibit safe and convenient pedestrian, bicycle or vehicular access in the vicinity of the subject site.

12. Whether natural features are appropriately preserved and integrated with the project;
    Existing natural features will be integrated into the site design to the extent feasible. As a vacant residential lot, the important natural features requiring preservation are limited. The project will introduce a full landscaping plan so as to ensure an appropriate level of vegetation commensurate with that exhibited throughout the rest of the neighborhood.

13. Whether the materials, textures, colors and details of construction are an appropriate expression of its design concept and function and whether they are compatible with the adjacent and neighboring structure and functions;
    All structures are unified with similar paint and trim color choices, as well as wood clad doors and windows facing the street. The proposed materials, colors, and design elements are traditionally-inspired and are readily consistent with those typified by other residential buildings in the neighborhood.

14. In areas considered by the board as having a unified design character or historical character, whether the design is compatible with such character;

As stated above, the design will feature materials, colors, and a design that is typical of the neighborhood and consistent with traditional building forms and therefore will be compatible with the established character.

15. Whether the landscape design concept for the site, as shown by the relationship of plant masses, open space, scale, plant forms and foliage textures and colors create a desirable and functional environment and whether the landscape concept depicts an appropriate unity with the various buildings on the site;
    Generous landscaping proposed around the property frontage and street site setback that includes shrubs and trees will soften the look of the new residence and provide continuity with other lots at a level commensurate with that exhibited by other properties in the neighborhood.

16. Whether plant material is suitable and adaptable to the site, capable of being properly maintained on the site, and is of a variety which is suitable to the climate of St. Helena.
    Proposed landscaping would include such plants as Japanese maple, Chinese Pistache, Northern white cedar, pyramidal European hornbeam, as well as smaller plantings of boxwood hedge, lavender, catmint, Mendocino reed grass, amongst others. The proposed vegetation is common throughout this region and readily adaptable to the climate and capable of being easily maintained.

17. Whether sustainability and climate protection are promoted through the use of green building practices such as appropriate site/architectural design, use of green building materials, energy efficient systems and water efficient landscape materials.
    The proposed residence will use energy and water efficient fixtures and, given that it is located in an area within walking distances to commercial uses and public amenities, it will further sustainability goals and help achieve climate protection goals.

Planning Department Conditions of Approval

1. The design review shall be vested within one (1) year from the date of final action. A building permit for the use allowed under this approval shall have been obtained within one (1) year from the effective date of this action or the approval shall expire, provided however that the approval may be extended for up to two (2) one-year periods pursuant to the St. Helena Municipal Code, Section 17.08.130, Extension of Permits and Approvals. Any request for an extension of this approval shall be justified in writing and received by the Planning Department at least thirty (30) days prior to expiration.
2. The approvals shall not become effective until fourteen (14) calendar days after approval, providing that the action is not appealed by the City Council or any other interested party within that 14-day period.
3. All required fees, including planning fees, development impact fees, residential in-lieu housing fees, building fees, toilet retrofit fees, and St. Helena Unified School District

fees shall be paid prior to issuance of a building permit. Fees shall be those in effect at the time of the issuance of the building permit.

4. In any action or proceeding to attack, challenge, invalidate, set aside, void or annul the City's approval of applicant's Project, in whole or in part, applicant shall defend, at its own expense and without any cost to the City, and with counsel acceptable to the City, and shall fully and completely indemnify and hold the City, its agents, officers, and employees harmless from and against any and all claims, causes of action, damages, costs, attorney's fees and liability of any kind, so long as the City reasonably promptly notifies the applicant of any such claim, action, or proceedings and the City cooperates fully in the defense of the action or proceedings.
5. Provided they are in general compliance with this approval, minor modifications may be approved by the Planning Director.
6. Pursuant to St. Helena Municipal Code Section 17.08.110, this permit shall run with the land and shall be binding upon all parties having any right, title or interest in the real property or any part thereof, their heirs, successors and assigns, and shall inure to their benefit and benefit of the City of St. Helena.
7. The primary purpose of this review is for compliance with the General Plan and Zoning Ordinance. The property owners or their designee shall be responsible for meeting with the Building Official, Fire Inspector and or Public Works Department to review compliance with Building Codes, Fire Codes and specific Public Works Standards including fire protection systems and any applicable accessibility standards of Title 24.
8. Construction shall be in compliance with plans submitted and reviewed by the Planning Commission on February 7, 2017 except as modified herein.
9. For the purposes of setback compliance, all buildings and structures, as measured from the *edge of structure*, shall meet the minimum setback requirements as enumerated in the St. Helena Zoning Ordinance. Compliance with setbacks shall be clearly shown on all plans submitted for building permit.
10. Prior to issuance of occupancy, the applicant shall provide a copy of issued and finaled building permits detailing the successful installation of water retrofits needed to achieve water neutrality and as detailed in the water neutrality analysis, dated November 23,2015.
11. Exterior lighting shall be directed or shielded to prevent glare onto the public roadway or adjacent properties.
12. To reduce disturbance of residents in the project vicinity, construction activities which generate noise that can be heard at the property line of any parcel of real property within the City limits shall be limited to 8:00 a.m. to 5:00 p.m. Monday through Saturday. Delivery of materials/equipment and cleaning and servicing of machines/equipment shall be limited to 7:00 a.m. to 6:00 p.m. Exceptions to these time restrictions may be granted by the Public Works Director for one of the following reasons: (1) inclement weather affecting work, (2) emergency work, or (3) other work,

if work and equipment will not create noise that may be unreasonably offensive to neighbors as to constitute a nuisance. The City Engineer must be notified and give approval in advance of such work. No construction activities shall occur on Sundays or federal or local holidays that generate noise that can be heard at the property line of any parcel of real property within the City limits.

Public Works Department Conditions of Approval

13. Approval of this project shall be subject to the requirements of, and all improvements shall be designed and constructed in accordance with, the most current version at the time of improvement plan submittal, Caltrans Standards and Specifications, the City of St. Helena Municipal Code, the St. Helena Water and Sewer Standards, the St. Helena Street, Storm Drain and Sidewalk Standards, and all current federal, state and county codes governing such improvements.

14. For any improvements outside the existing building envelope, a grading and drainage plan showing topographic data, all easements, infrastructure onsite and directly adjoining, and an erosion control plan shall be submitted for review and approval by the City Engineer prior to the issuance of a building permit. If the project entails more than 50 cubic yards of soil disturbance, 10,000 square feet of disturbance area, a cut or fill of 3 feet or more, or alteration of any drainage pattern, a grading permit shall be required.

15. Drainage needs to be routed to prevent inundation of neighboring properties. Grading and/or site improvement plans shall show how 2-year and 10-year storm flows shall be infiltrated on site and/or diverted at the property lines to prevent inundation of neighboring properties.

16. Prepare and implement a Stormwater Control Plan as required by the Bay Area Stormwater Management Agencies Association (BASMAA) Post-Construction Manual, dated July 14, 2014.

17. Erosion and sediment control plans shall conform to the latest State and City codes at a minimum.

18. Site plan shall show location of any trees proposed to be removed and/or retained within the project area.

19. Provide details of any and all proposed fencing and/or walls on all plans submitted for building permit review.

20. The applicant shall install an approved backflow device behind the existing water meter prior to Certificate of Occupancy. Any new and modified existing water laterals, meters and backflow prevention devices shall be required and constructed in accordance with the current requirements of the City of St. Helena's Water Standards and the California Department of Health Standards. Existing meter

boxes located within a driveway shall be retrofitted with a traffic-rated box. New laterals shall be located perpendicular to the water main and outside any driveway/drive aisle.

21. The property shall be connected to the City of St. Helena municipal water system and installed per City of St. Helena standards.

22. Remodels or new construction which require fire sprinklers shall install an appropriately-sized water service with appropriate backflow and meter devices prior to Certificate of Occupancy. Fire system calculations shall be submitted with the Grading and Drainage Plan to verify fire service lateral and meter sizing. Deferred submittals are not accepted.

23. The applicant shall incorporate water conservation practices into the proposed project per the Theoretical Water Use Report prepared by Delta Consulting & Engineering, dated November 23, 2016. Any and all non-conforming appliances and plumbing fixtures shall be removed from the premises. The water conservation requirements shall be replicated in full on the architectural plans.

24. If the project includes 500 square feet or more of new landscaping and/or 2,500 square feet or more of rehabilitated landscape, the proposed landscaping shall comply with the State's Model Water Efficient Landscape Ordinance (MWELO).

25. All driveway approaches shall be per current City and ADA standards. Where none exists, or where deteriorating or non-standard driveway approaches exist, they shall be installed or replaced at the direction of the Public Works Department prior to Certificate of Occupancy. The driveway shall be replaced in order to conform to current ADA Standards.

26. The applicant shall apply for annexation to the St. Helena Municipal Sewer District No. 1 prior to issuance of a Building Permit. The application shall be completed in accordance with the City of St. Helena's Sewer Annexation Procedures including all annexation, impact, connection, and sewer fees.

27. The applicant shall conform to the City of St. Helena Water and Sewer Standards Section 6-2.10 which includes assessing the adequacy of the lateral, replacing if necessary and installing any needed cleanouts prior to Certificate of Occupancy.

28. Prior to Certificate of Occupancy, the applicant shall conform to the requirements of City of St. Helena Standard Drawings, Water and Sewer Standards Section 7-1.12, and applicable Health Standards which includes water laterals being a minimum of five (5) feet from sewer laterals.

29. Any missing or broken curb and gutter along the project frontage shall be constructed and/or replaced prior to Certificate of Occupancy, extent to be determined by the Public Works Department.

30. The applicant shall repair all public improvements that are damaged by the construction process in accordance with the City Water/Sewer/Street/Storm Drain/Sidewalk Standards prior to Certificate of Occupancy.

31. Existing streets being cut by new utility services will require edge grinding and an A.C. overlay per City standards, extent to be determined by the Public Works Department.

32. An encroachment permit shall be required for any work performed in the public right of way.

Building Department Conditions of Approval

33. The applicant will be required to comply with the codes adopted at the time the applicant applies for a building permit.

34. When submitting plans for a building permit, the plans shall include all documentation listed on the building permit application checklist.

35. The applicant shall provide a construction waste management plan with the building permit application.

36. The plans for construction shall include a checklist for compliance with the California Green Buildings Standards Code, mandatory measures. Provide a reference on the checklist indicating where the mandatory measures can be found on the plans.

37. When submitting plans, the title page shall include all information referenced on the building permit application checklist Title Page requirements.

38. Building Permit application materials and plans shall include any documentation pertaining to special loads applicable to the design and the specified section of the code that addresses the condition; special inspections for any systems or components requiring special inspection; requirements for seismic resistance; and a complete list of deferred submittals at time of application. Any deferral of the required submittal items shall have prior approval of the Building Official however deferral of fire sprinkler design is not allowed.

I HEREBY CERTIFY that the foregoing design review was duly and regularly approved by the Planning Commission of the City of St. Helena at a regular meeting of said Planning Commission held on February 7, 2017 by the following roll call vote:

AYES:
NOES:

ABSENT:
ABSTAIN:

APPROVED:

Grace Kistner
Chair, Planning Commission

ATTEST:

Noah Housh
Planning Director

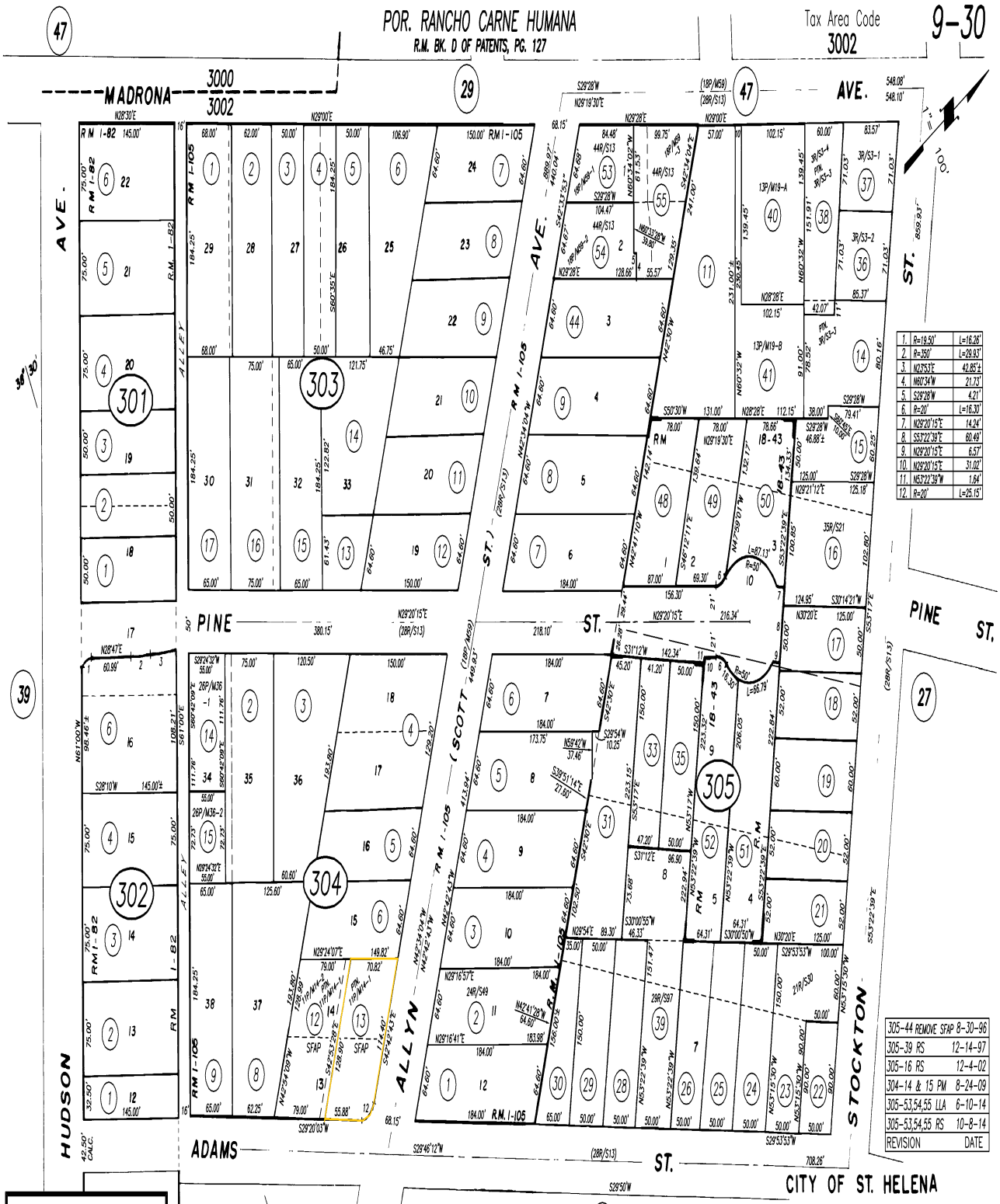

NOTE: This Map Was Prepared For Assessment Purposes Only , No Liability Is Assumed For The Accuracy Of The Data Delineated Hereon.

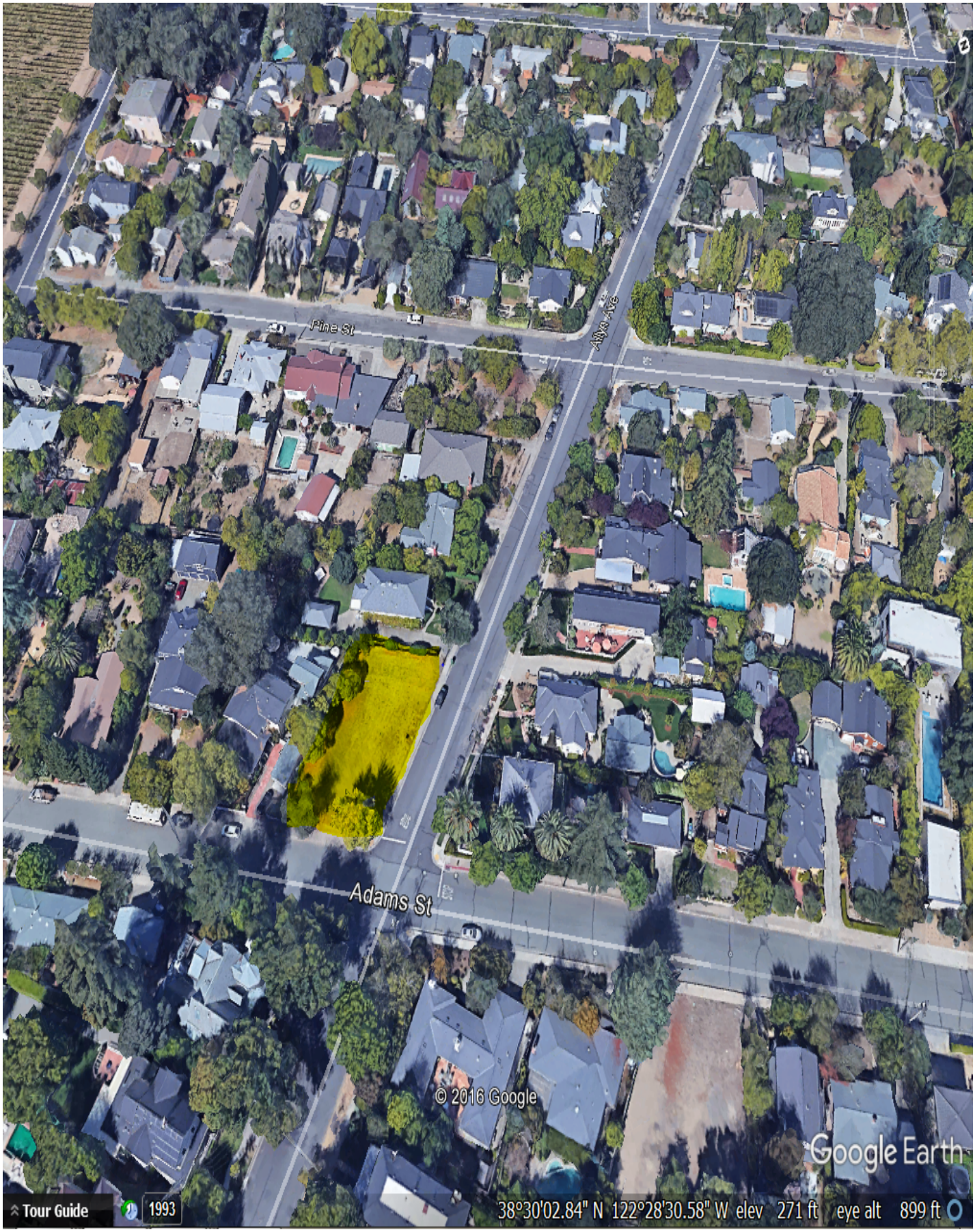
Pine St
Alva Ave
Adams St
© 2016 Google
Google Earth
Tour Guide
1993
38°30'02.84" N 122°28'30.58" W elev 271 ft eye alt 899 ft

ADAMS STREET RESIDENCE

ST. HELENA, CALIFORNIA

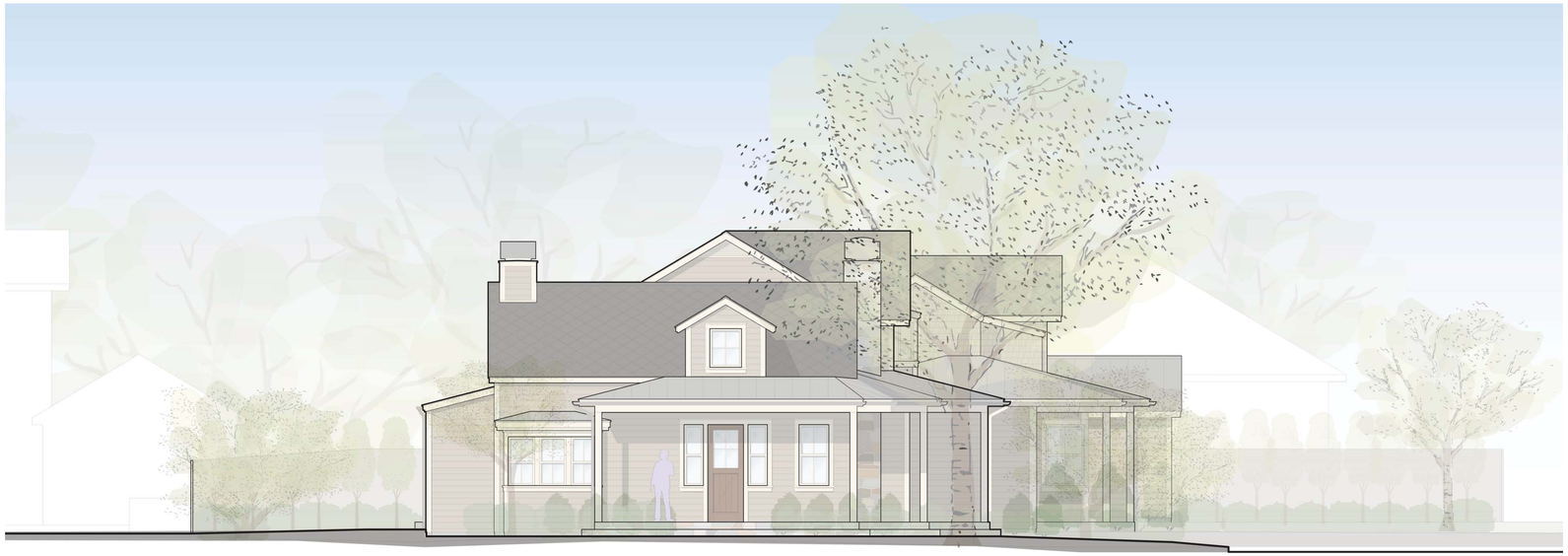

Project Statistics

Project Address:
1405 Adams Street, St. Helena CA 94574

APN:
009-304-013

Zoning:
Medium Density Residential (MR)

Lot Area:
8,629 Sq. Ft.

Combining District:
None

Construction Type:
Type V, non-rated

Occupancy:
'R3' at Main House and Second Unit

Number of Stories:
Two Stories at Main House and Second Unit, One Story at Garage

Building Areas:

BUILDING AREAS (SQ.FT.):		TOTAL
MAIN HOUSE	1st FLR	1757
	2nd FLR	497
SECOND UNIT	1st FLR	298
	2nd FLR	265
GARAGE	1st FLR	278 (UNCONDITIONED)
TOTAL:		3095 (2817 COND. / 278 UNCOND.)

Vicinity Map

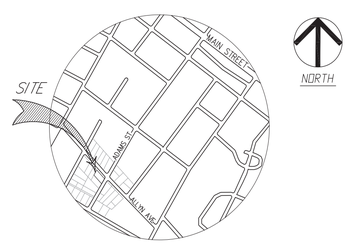

Drawing Index

1 - Survey / Existing Site Plan

Architectural Drawings

2 - Proposed Site Plan
2.1 - Stormwater Management Diagram
3 - First Floor Plan
4 - Second Floor Plan
5 - Roof Plan
6 - North Elevation (Allyn Avenue)
7 - East Elevation (Adams Street)
8 - Rear Elevations
9 - Material Palette (11x17 set only)

Landscape Drawings

Irrigation Plan
Planting Plan
Vegetable Garden Fence and Entry Gate Detail (11x17 set only)
Rear Yard Fence Detail (11x17 set only)

Adams Street Residence

Design Review Drawings

1405 Adams Street / 1405 Allyn Avenue
St. Helena, CA 94574

October 12, 2016 - Initial Submittal
December 21, 2016 - Revisions

WADE DESIGN ARCHITECTS
29 Magnolia Ave. San Anselmo, CA 94960
Phone: 415.578.2856 Fax: 415.578.2867
info@wade-design.com

0

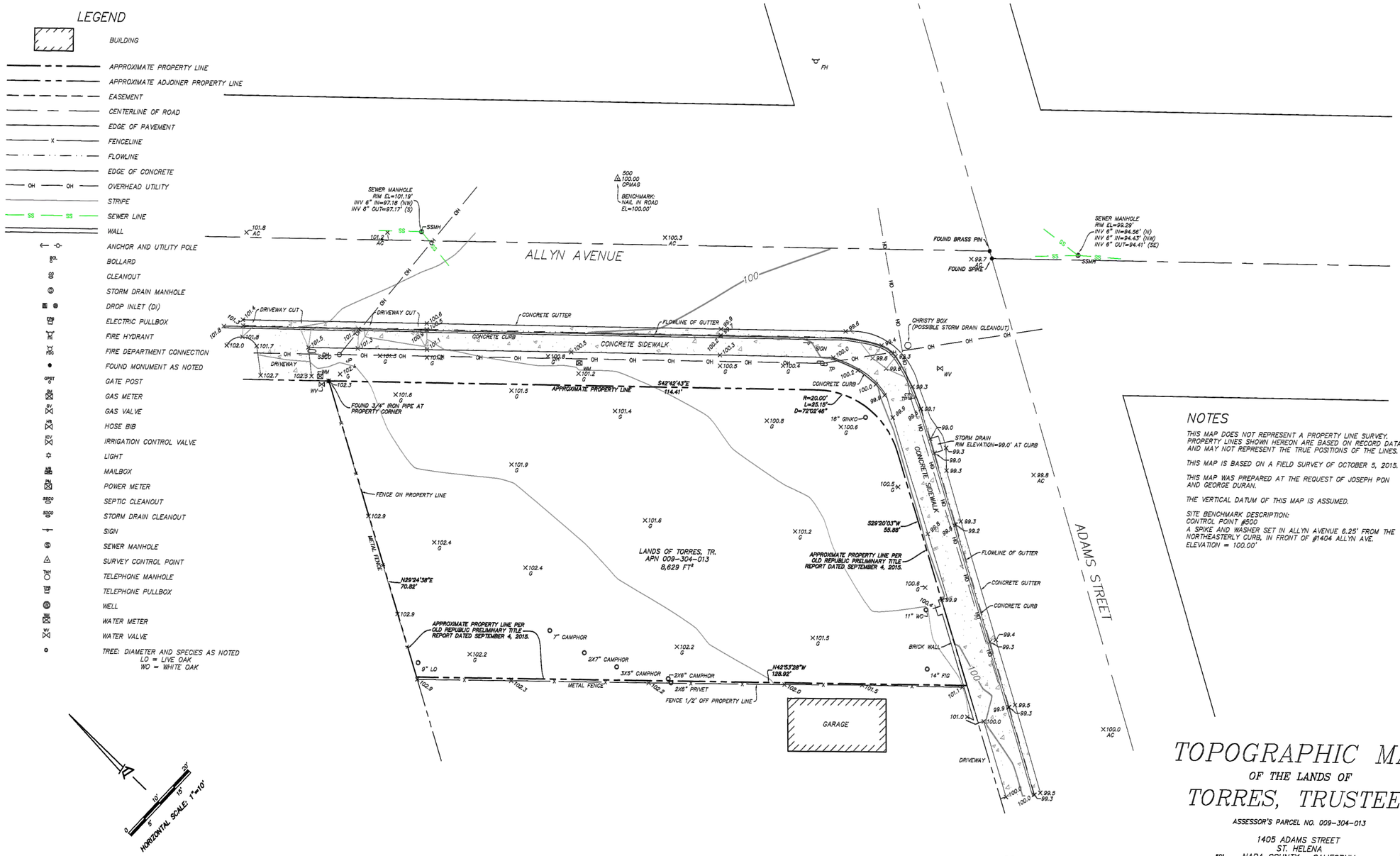

NOTES

THIS MAP DOES NOT REPRESENT A PROPERTY LINE SURVEY. PROPERTY LINES SHOWN HEREON ARE BASED ON RECORD DATA, AND MAY NOT REPRESENT THE TRUE POSITIONS OF THE LINES.

THIS MAP IS BASED ON A FIELD SURVEY OF OCTOBER 5, 2015.

THIS MAP WAS PREPARED AT THE REQUEST OF JOSEPH PON AND GEORGE DURAN.

THE VERTICAL DATUM OF THIS MAP IS ASSUMED.

SITE BENCHMARK DESCRIPTION:
CONTROL POINT #500
A SPIKE AND WASHER SET IN ALLYN AVENUE 6.25' FROM THE NORTHEASTERLY CURB, IN FRONT OF #1404 ALLYN AVE.
ELEVATION = 100.00'

TOPOGRAPHIC MAP

OF THE LANDS OF

TORRES, TRUSTEES

ASSESSOR'S PARCEL NO. 009-304-013

1405 ADAMS STREET
ST. HELENA
NAPA COUNTY CALIFORNIA

△ 521 99.55 CPMAG

PREPARED BY: TERRA FIRMA SURVEYS, INC.
P.O. BOX 533
ST. HELENA CA 94574
PHONE: (707) 963-7565

DATE: October 8, 2015

1

Survey / Existing Site Plan

Scale: 3/32" = 1'-0" | 1405 Adams Street / 1405 Allyn Avenue, St. Helena, CA 94574 | October 12, 2016

North

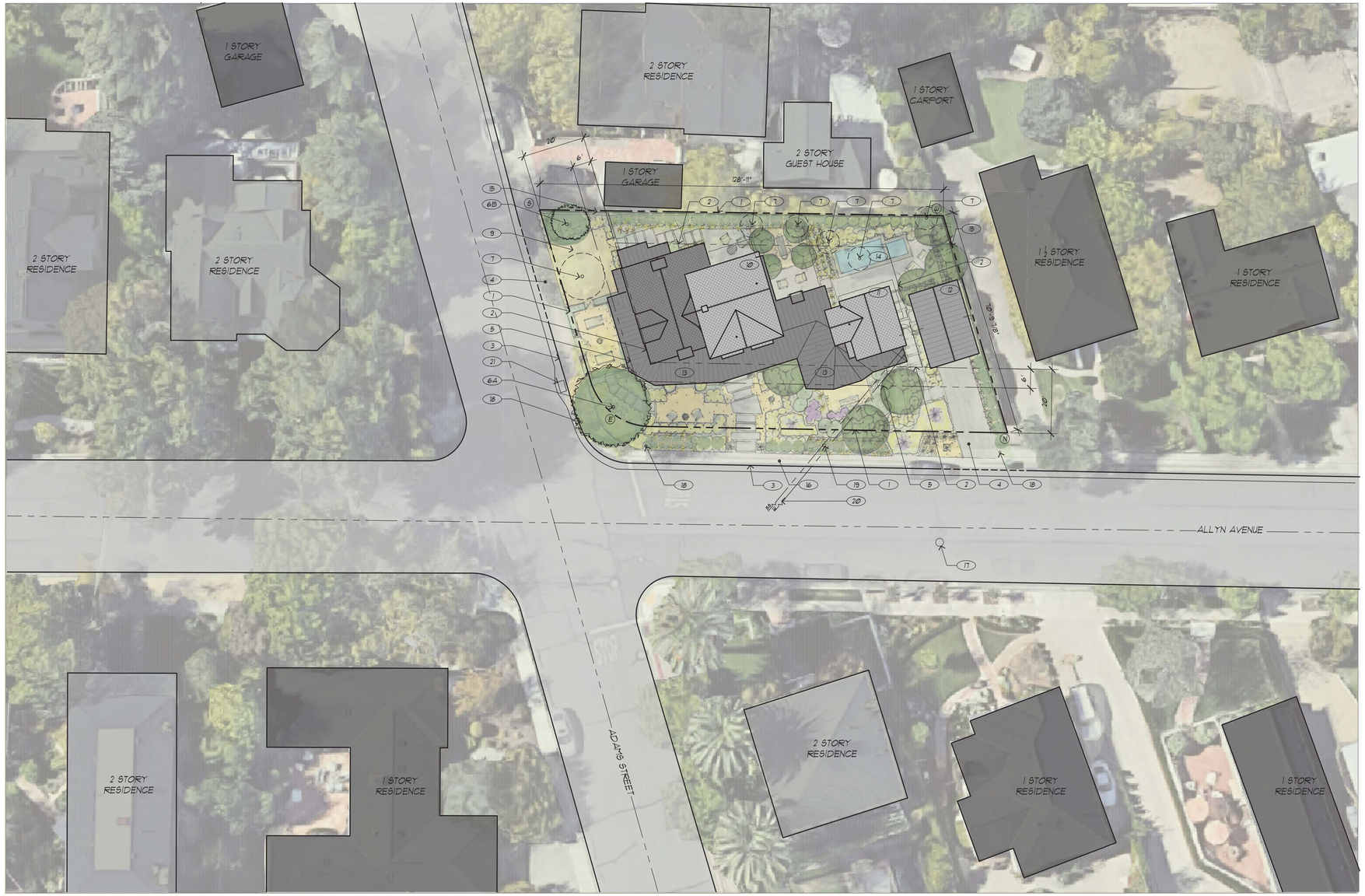

SHEET NOTES

1. PROPERTY LINE
2. SETBACK LINE
3. CONCRETE CURB
4. ADA COMPLIANT DRIVEWAY WITH 2% MAX CROSS SLOPE FOR 4' MIN WIDTH
5. SETBACK EXTENSION FOR PORCH
6. EXISTING TREE TO BE PROTECTED SEE DRAWING FOR DRIPLINES
   A: GINKO, 16" TRUNK
   B: FIG, 14" TRUNK
7. EXISTING TREE TO BE REMOVED. SEE DRAWING FOR DRIPLINE
8. NOT USED
9. SECOND UNIT PARKING SPACE
10. MAIN HOUSE
11. SECOND UNIT
12. GARAGE
13. WRAP AROUND PORCH
14. POOL
15. FENCE, SEE LANDSCAPE DRAWINGS
16. SIDEWALK
17. EXISTING SEWER MAN HOLE
18. EXISTING UTILITY POLE
19. EXISTING WATER METER
20. SEPTIC AND WATER LATERAL CONNECTIONS TO TIE INTO EXISTING STREET SERVICES, AND SHALL BE LOCATED PRIOR TO START OF CONSTRUCTION
21. EXISTING STORM DRAIN

KEY

- 1 STORY STRUCTURE
- 2 STORY STRUCTURE

Proposed Site Plan

Scale: 1/16" = 1'-0"

1405 Adams Street / 1405 Allyn Avenue, St. Helena, CA 94574

October 12, 2016
December 21, 2016

North

WADE DESIGN ARCHITECTS
29 Magnolia Ave. San Anselmo, CA 94960
Phone: 415.578.2856 Fax: 415.578.2867
info@wade-design.com

2

KEY

- IMPERVIOUS AREA FROM WHICH RUNOFF WILL BE DIRECTED
- PERVIOUS AREA TO RECEIVE RUNOFF
- PERMEABLE PAVERS

SQUARE FOOTAGE PER ZONE

ZONE COLOR AND NUMBER	IMPERVIOUS AREA (SF)	MIN. ALLOWED TRIBUTARY PERVIOUS AREA (SF)	TRIBUTARY PERVIOUS AREA PROVIDED (SF)	PERMEABLE PAVER AREA (SF)
1	1530	765	1610	242
2	694	347	805	-
3	366	183	268	146
4	379	190	194	-
5	499	250	280	-
6	408	204	234	16
7	332	166	225	-
8	436	218	599	164
TOTAL	4644	2323	4215	568

GENERAL NOTES

1. DOWNSPOUTS SHALL DIRECT RUN OFF FROM ROOFS TO THE CORRESPONDING RECEIVING PERVIOUS AREA.
2. ALL IMPERVIOUS HARDSCAPE SHALL BE SLOPED 2% TO DIRECT RUN OFF TO THE CORRESPONDING RECEIVING PERVIOUS AREA.

Stormwater Management Diagram

Scale: 3/16" = 1'-0" 1405 Adams Street / 1405 Allyn Avenue, St. Helena, CA 94574 December 21, 2016

North

WADE DESIGN ARCHITECTS
29 Magnolia Ave. San Anselmo, CA 94960
Phone: 415.578.2856 Fax: 415.578.2867
info@wade-design.com

2.1

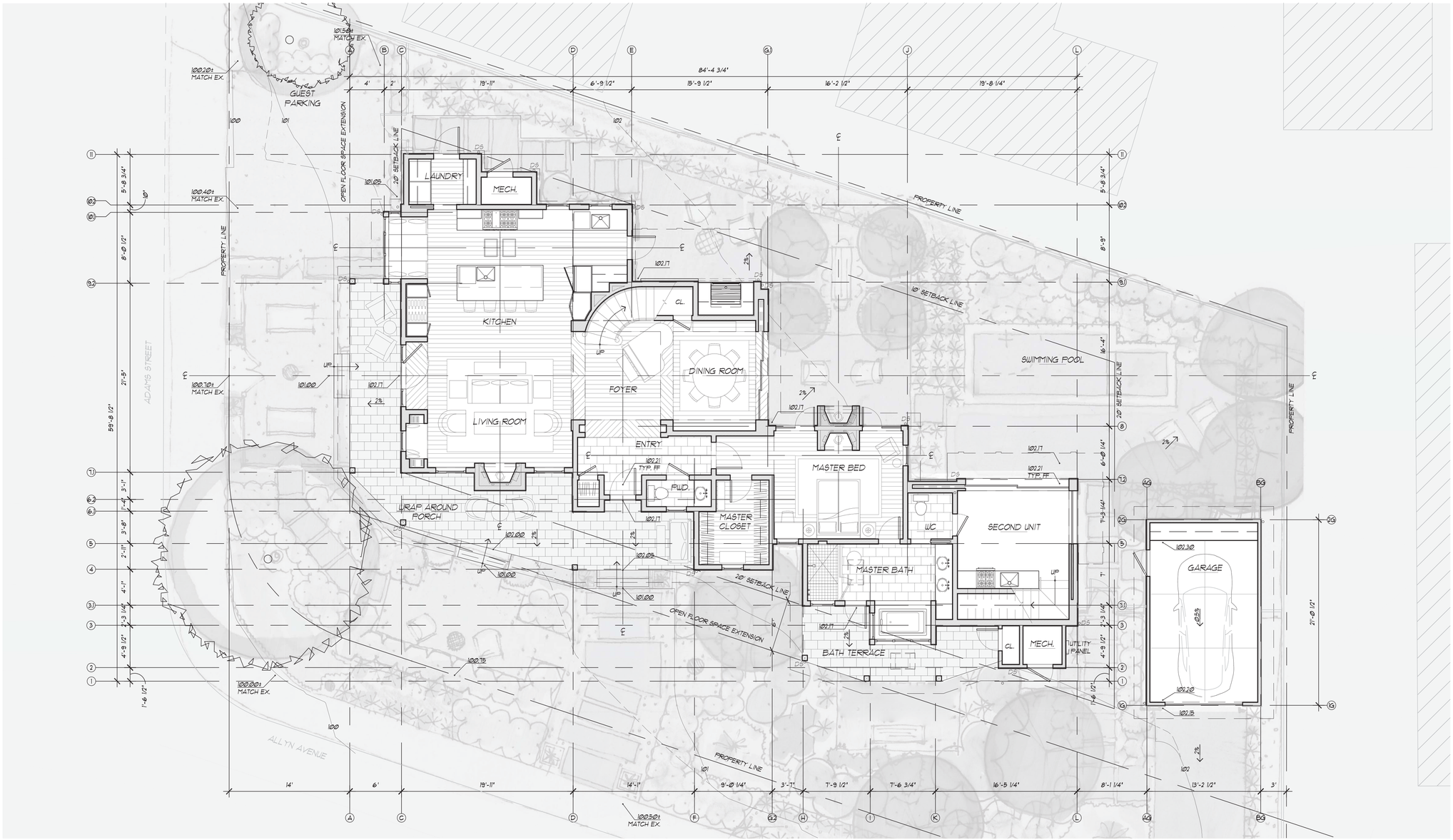

First Floor Plan

Scale: 3/16" = 1'-0"

1405 Adams Street / 1405 Allyn Avenue, St. Helena, CA 94574

October 12, 2016
December 21, 2016

North

WADE DESIGN ARCHITECTS
29 Magnolia Ave. San Anselmo, CA 94960
Phone: 415.578.2856 Fax: 415.578.2867
info@wade-design.com

3

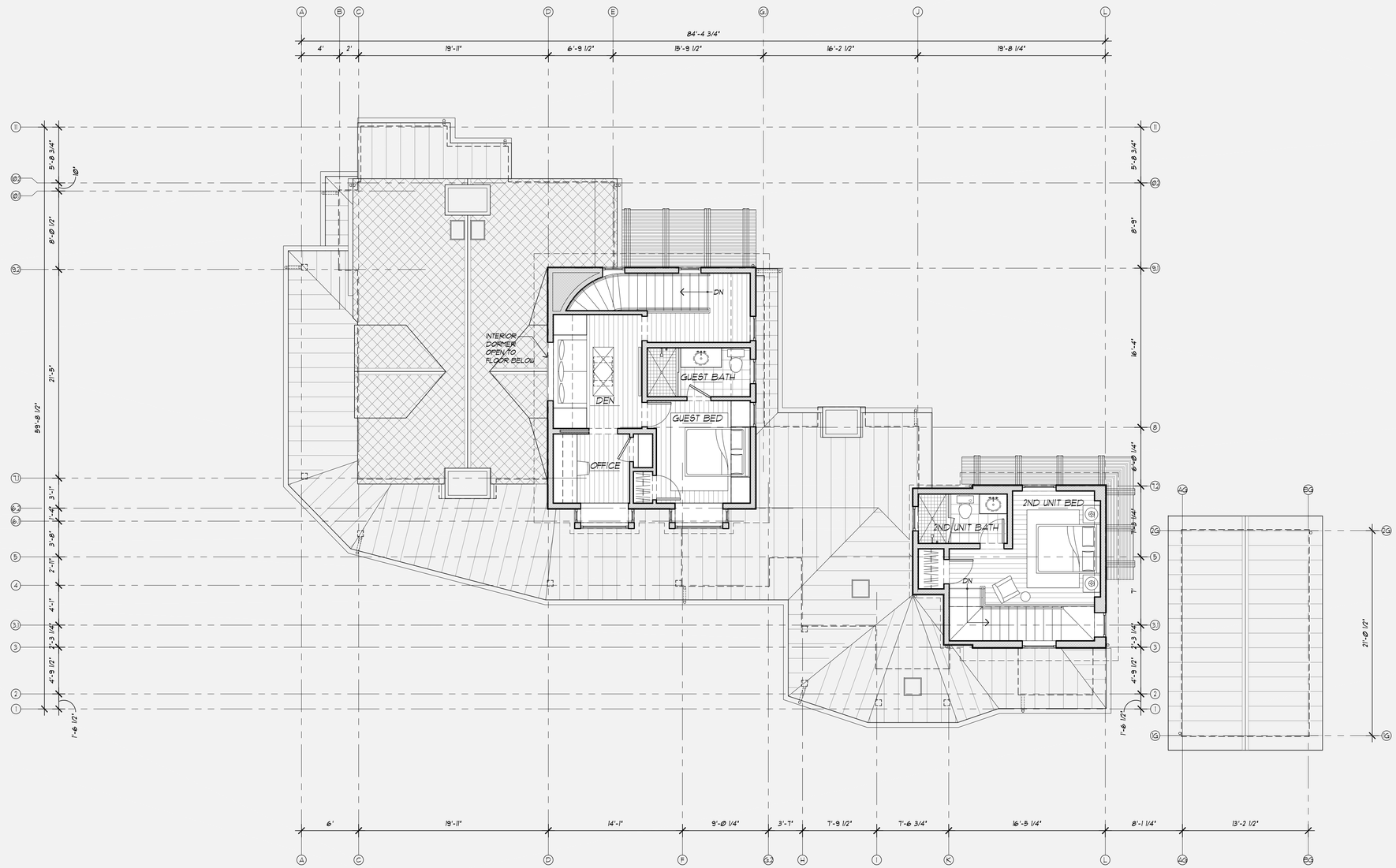

Second Floor Plan

Scale: 3/16" = 1'-0"

1405 Adams Street / 1405 Allyn Avenue, St. Helena, CA 94574

October 12, 2016
December 21, 2016

North

WADE DESIGN ARCHITECTS
29 Magnolia Ave. San Anselmo, CA 94960
Phone: 415.578.2856 Fax: 415.578.2867
info@wade-design.com

4

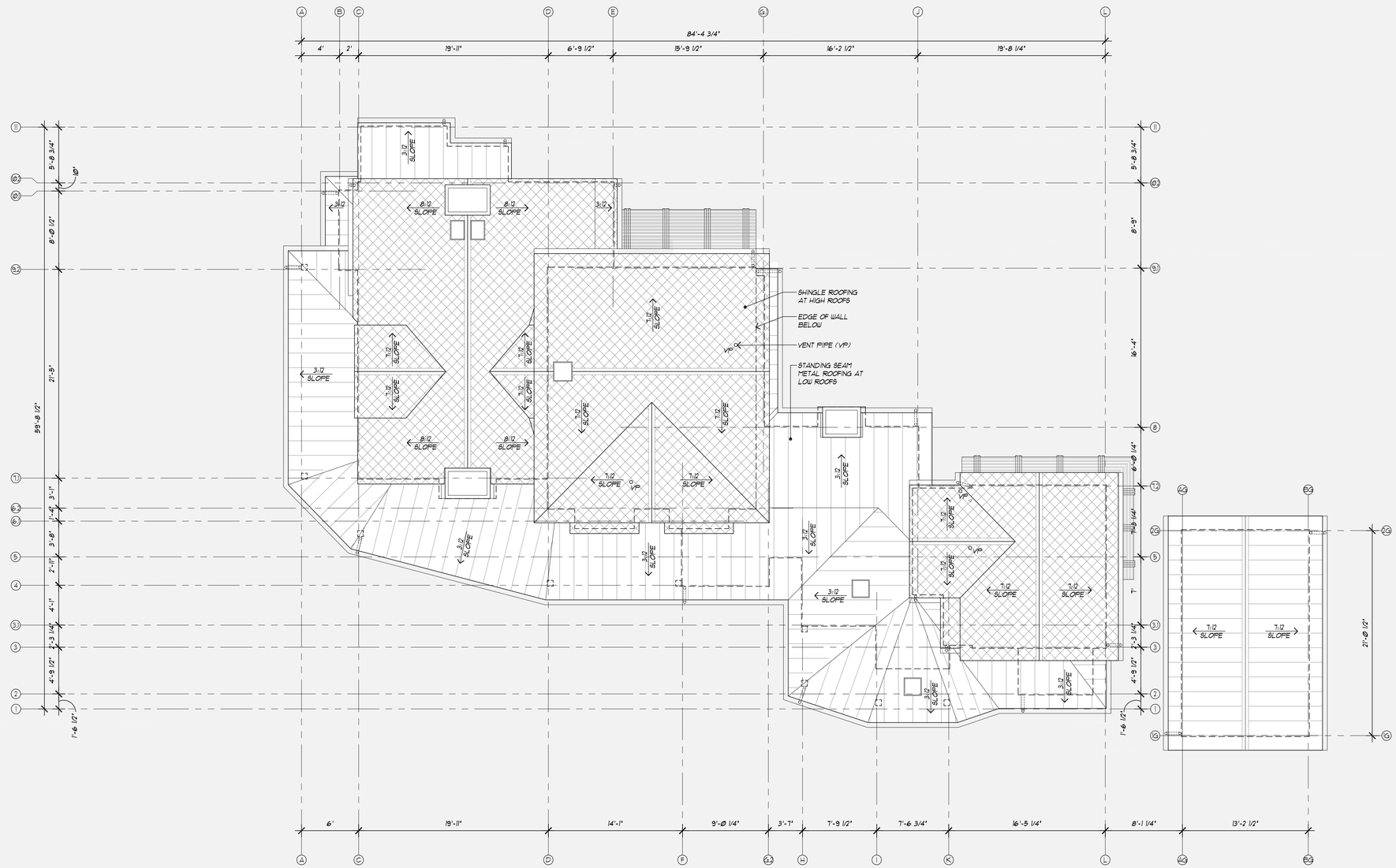

Roof Plan

Scale: 3/16" = 1'-0"

1405 Adams Street / 1405 Allyn Avenue, St. Helena, CA 94574

October 12, 2016
December 21, 2016

North

WADE DESIGN ARCHITECTS
29 Magnolia Ave. San Anselmo, CA 94960
Phone: 415.578.2856 Fax: 415.578.2867
info@wade-design.com

5

View of neighboring property to South East, accross Adams Street

View of property along Allyn Avenue

View of neighboring property to the North West

North Elevation (Allyn Avenue)

Scale: 3/16" = 1'-0" 1405 Adams Street / 1405 Allyn Avenue, St. Helena, CA 94574 October 12, 2016

WADE DESIGN ARCHITECTS
29 Magnolia Ave. San Anselmo, CA 94960
Phone: 415.578.2856 Fax: 415.578.2867
info@wade-design.com

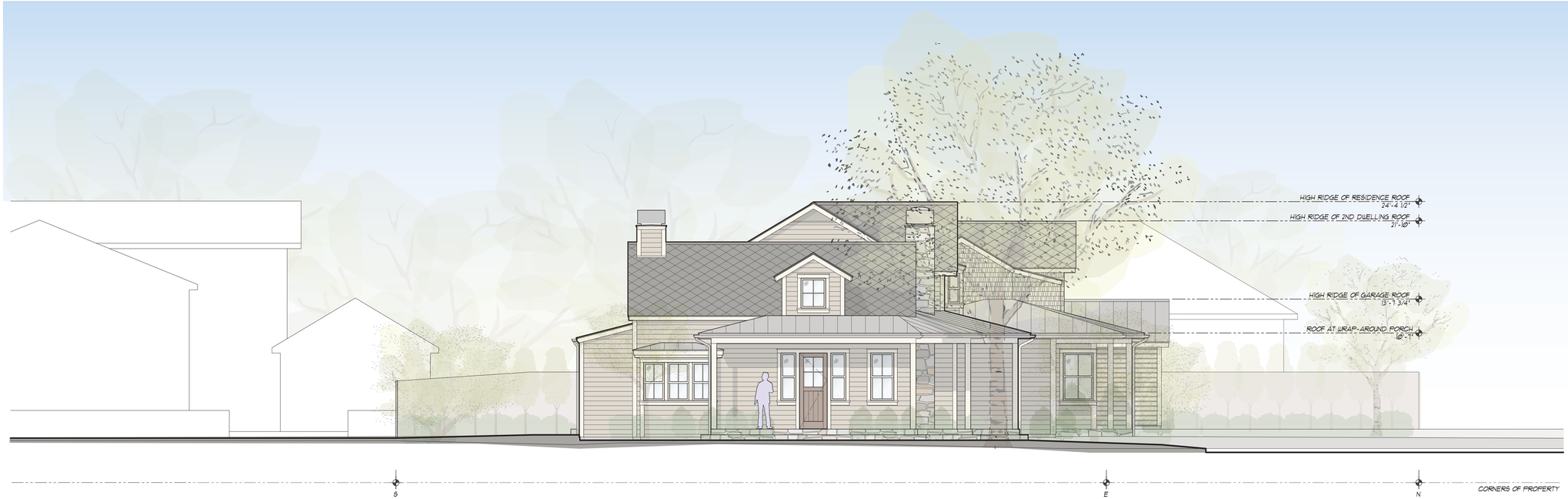

View of neighboring property to the South West

View of property along Adams Street

View of neighboring property to North East, accross Allyn Avenue

East Elevation (Adams Avenue)

Scale: 3/16" = 1'-0" | 1405 Adams Street / 1405 Allyn Avenue, St. Helena, CA 94574 | October 12, 2016

WADE DESIGN ARCHITECTS
29 Magnolia Ave. San Anselmo, CA 94960
Phone: 415.578.2856 Fax: 415.578.2867
info@wade-design.com

West Elevation

South Elevation

Rear Elevations

Scale: 3/16" = 1'-0" 1405 Adams Street / 1405 Allyn Avenue, St. Helena, CA 94574 October 12, 2016

WADE DESIGN ARCHITECTS
29 Magnolia Ave. San Anselmo, CA 94960
Phone: 415.578.2856 Fax: 415.578.2867
info@wade-design.com

Standing seam metal roofing at low roofs
Metal Sales , Old Zinc Grey

Diamond patterned shingle roofing at high roofs
GAF, Sienna, Harbor Mist

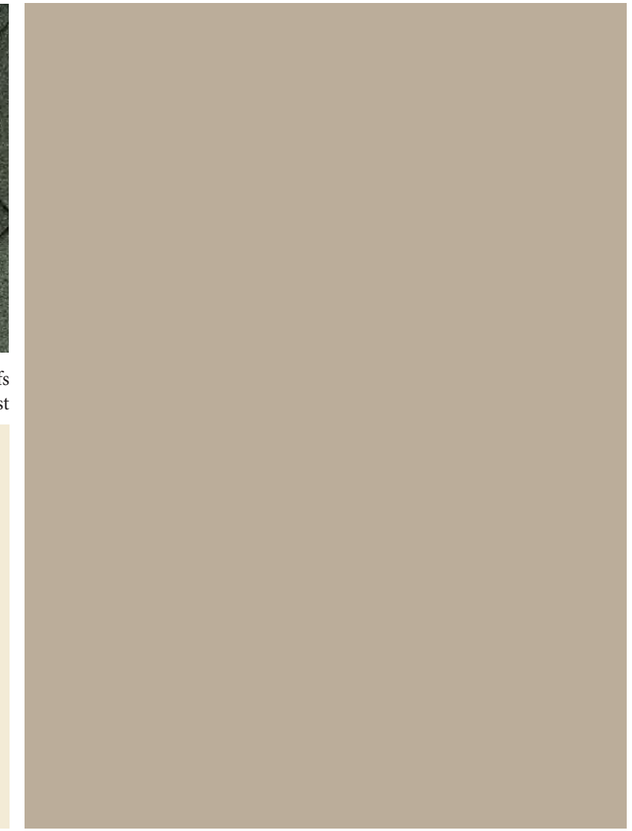

Chimneys, low walls, and covered porch floor
SBI, St. Helena Cottage Wall Stone

Steel window & doors
Jada, Deep Bronze

Primary doors
London Clay No. 244

Downspouts and gutters
Worsted No. 284

Wood trim and windows
Lime White No. 1

Horizontal siding, shingle, and cove siding
Farrow and Ball, Light Gray No. 17

Material Palette

Scale: NTS

1405 Adams Street / 1405 Allyn Avenue, St. Helena, CA 94574

October 12, 2016

WADE DESIGN ARCHITECTS
29 Magnolia Ave. San Anselmo, CA 94960
Phone: 415.578.2856 Fax: 415.578.2867
info@wade-design.com

IRRIGATION NOTES

THE LANDSCAPE CONTRACTOR SHALL DESIGN AND INSTALL A FULLY AUTOMATIC IRRIGATION SYSTEM TO PROVIDE FULL AND THOROUGH COVERAGE TO ALL NEWLY PLANTED AREAS SHOWN ON THE PLANTING PLAN. THE SYSTEM DESIGN SHALL ACCOMMODATE THE WATER REQUIREMENTS OF THE CALIFORNIA NATIVE MATERIALS AND ORNAMENTALS, AND PROVIDE FOR SEPARATE VALVES FOR EACH EXPOSURE AND AS REQUIRED. DRIP EMITTERS WITH FLEXIBLE TUBING SHALL BE INSTALLED AT EACH PLANT. IN AREAS DENSELY PLANTED WITH 4" SIZE MATERIALS, ONE EMITTER MAY SUFFICE FOR 2 OR 3 PLANTS. ALL EQUIPMENT SHALL BE INSTALLED IN ACCORDANCE WITH ALL ORDINANCES AND CODES OF THE CITY OF LAFAYETTE AND CONTRA COSTA COUNTY.

ALL MAINLINE PIPING AND CONTROL WIRING SHALL BE INSTALLED IN SEPARATE SCHEDULE 40 PVC SLEEVES, NOMINAL TWO SIZES LARGER THAN THE IRRIGATION PIPE, AND NOT LESS THAN 4" IN DIAMETER. SLEEVES SHALL BE BURIED A MINIMUM OF 2'-0" BELOW FINISHED GRADE AND BACKFILLED WITH GRAVEL, NOT TO EXCEED 1/2" PARTICLE SIZE. NO LARGE ROCKS OR EXTRANEOUS MATERIALS WILL BE USED IN TRENCH BACKFILL. EXTEND SLEEVES A MINIMUM OF 4" BEYOND ALL PAVING, WALLS, ETC. THE 'HUNTER I-CORE' CONTROLLER SHALL BE INSTALLED AS DIRECTED BY THE OWNER. PROVIDE TWO SETS OF KEYS TO THE CONTROLLER TO THE OWNER, AS WELL AS FULL INSTRUCTION ON THE OPERATION OF THE CONTROLLER. THE INSTALLER SHALL REVIEW THE PLANNED SYSTEM WITH THE OWNERS' REPRESENTATIVE PRIOR TO INSTALLATION.

1. HUNTER I-CORE IRRIGATION CONTROLLER WILL BE INSTALLED TO CONTROL THE IRRIGATION SCHEDULE.
2. RAIN SENSOR WILL BE INSTALLED FOR THE I-CORE CONTROLLER.
3. ALL VALVES WILL BE ANTI-SIPHON AND PRESSURE REGULATED.
4. ALL TREES TO BE PLACED ON A SEPARATE VALVE.
5. CHECK VALVE AND BACK FLOW VALVE TO BE INSTALLED.
6. ALL PLANTS ARE TO IRRIGATED WITH 1/2" DRIP TUBING AND 2 GPH EMITTERS.
7. TURF WILL BE IRRIGATED WITH MP ROTATORS (HUNTER), USING IN-LINE EMITTERS BETWEEN THE PAVERS.
8. IRRIGATION LAYOUT IS DIAGRAMMATIC AND INTENDED TO SHOW GENERAL LOCATIONS, FIELD ADJUSTMENTS MAY BE NECESSARY.

IRRIGATION NOTES

1. HUNTER I-CORE IRRIGATION CONTROLER WILL BE INSTALLED TO CONTROL THE IRRIGATION SCHEDULE.
2. RAIN SENSOR WILL BE INSTALLED FOR THE I-CORE CONTROLLER.
3. ALL VALVES WILL BE ANTI-SIPHON AND PRESSURE REGULATED.
4. ALL TREES TO BE PLACED ON A SEPERATE VALVE.
5. CHECK VALVE AND BACK FLOW VALVE TO BE INSTALLED.
6. ALL PLANTS ARE TO IRRIGATED WITH 1/2" DRIP TUBING AND 2 GPM EMITTERS.
7. TURF WILL BE IRRIGATED WITH MP ROTARS, USING IN-LINE EMITTERS BETWEEN THE PAVERS AND ALONG THE POOL COPING EDGE.
8. IRRIGATION LAYOUT IS DIAGRAMMATIC AND INTENDED TO SHOW GENERAL LOCATIONS, FIELD ADJUSTMENTS MAY BE NECCESSARY.

IRRIGATION TABLE

HYDROZONE	IRRIGATION	PLANTING TYPE
ZONE 1	DRIP	NORTH DRIVEWAY
ZONE 2	DRIP	NORTHWEST ENTRY
ZONE 3	DRIP	NORTH SIDEWALK
ZONE 4	DRIP	NORTHEAST ENTRY
ZONE 5	DRIP	SOUTHEAST PARKING
ZONE 6	DRIP	SOUTH ENTRY
ZONE 7	DRIP	SOUTHERN HEDGING
ZONE 8	DRIP	POOL AREA
ZONE 9	DRIP	EAST ENTRY
ZONE 10	N/A	POOL

IRRIGATION LEGEND:

DRIP IRRIGATED HYDROZONE

POOL AREA (HIGH WATER)

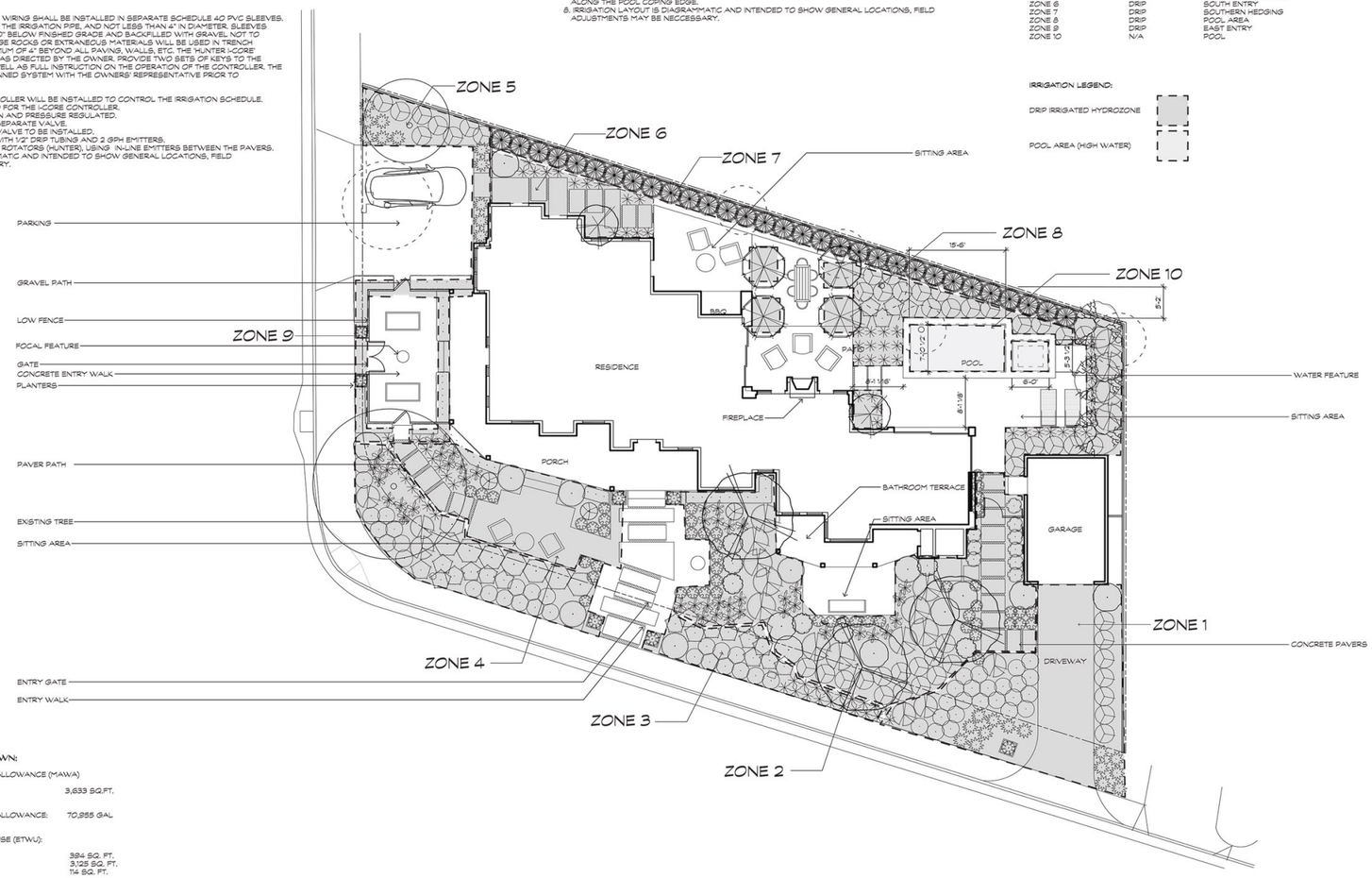

WATER USE BREAKDOWN:

MAXIMUM APPLIED WATER ALLOWANCE (MAWA)

TOTAL LANDSCAPE AREA:	3,633 SQ.FT.
MAXIMUM APPLIED WATER ALLOWANCE:	70,255 GAL

ESTIMATED TOTAL WATER USE (ETWU):

LOW WATER USE AREA	394 SQ. FT.
MEDIUM WATER USE AREA	3,125 SQ. FT.
HIGH WATER USE AREA	114 SQ. FT.
ESTIMATED TOTAL WATER USE	67,332 GAL

*SEE ATTACHED FORMS FOR COMPLETE WATER USE BREAKDOWN

duran-pon residence

HYDROZONE PLAN

SCALE: 1"=20'-0" DATE: 12/16/16

1405 Adams St

St. Helena, CA 94574 APN: 009-304-013

rozanski design

20820 broadway, suite c
sonoma, ca, 95476
707.343.1932

License #963723
www.rozanskidesign.com

WATER USE BREAKDOWN:

MAXIMUM APPLIED WATER ALLOWANCE (MAWA)

TOTAL LANDSCAPE AREA:	3,633 SQ. FT.
SPECIAL LANDSCAPE AREA:	0
MAXIMUM APPLIED WATER ALLOWANCE:	70,955 GAL.

ESTIMATED TOTAL WATER USE (ETWU):

LOW WATER USE AREA	394 SQ. FT.
MEDIUM WATER USE AREA	3,125 SQ. FT
HIGH WATER USE AREA	114 SQ. FT.
ESTIMATED TOTAL WATER USE	67,332 GAL.

*SEE ATTACHED FORMS FOR COMPLETE WATER USE BREAKDOWN

PLANTING LEGEND

WATER USE	BOTANICAL NAME	COMMON NAME	QUANTITY	SIZE
M	ACER PALMATUM 'SANGO KAKU'	JAPANESE MAPLE	2	24"
M	BUXUS 'GREEN BEAUTY'	BOXWOOD	60	1 GAL
M	BUXUS 'GREEN BEAUTY'	GLOBE BOXWOOD	6	5 GAL
M	CARPINUS BETULUS 'FASTIGIATA'	HORNBEAM	4	24"
M	DAPHNE ODORA 'MARGINATA'	VAIEGATED DAPHNE	3	1 GAL
M	GERANIUM 'BIOKOVO'	BIOKOVO CRANESBILL	68	1 GAL
M	HERNIARIA GLABRA	GREEN CARPET	256	4"
M	HYDRANGEA ARBORESCENS 'ANNABELLE'	ANNABELLE HYDRANGEA	7	5 GAL
L	LAVANDULA 'HIDCOTE'	ENGLISH LAVENDER	25	1 GAL
M	LIRIOPE ROYAL PURPLE	LILY TURF	43	1 GAL
L	LOMANDRA LONGIFOLIA 'BREEZE'	DWARF MAT RUSH	50	1 GAL
M	MAGNOLIA 'LITTLE GEM'	DWARF SOUTHERN MAGNOLIA	3	24"
M	MYRTUS COMMUNIS 'COMPACTA'	DWARF MYRTLE	8	5 GAL
M	NEPETA 'WALKERS LOW'	CAT MINT	50	1 GAL
M	PENSTEMON 'MIDNIGHT'	BEARD TONGUE	6	1 GAL
M	PISTACIA CHINENSIS	CHINESE PISTACHE	3	36"
M	PITTOSPORUM 'MARJORIE CHANNON'	MARJORE CHANNON PITTOSPORUM	9	5 GAL
M	PRUNUS LAUROCERASUS	ENGLISH LAUREL	15	24"
M	ROSA WHITE FLORAL CARPET'	CARPET ROSE	24	1 GAL
M	SARCOCOCCA RUSCIFOLIA	SWEET BOX	9	5 GAL
M	SESLERIA CAERULEA	MOOR GRASS	83	1 GAL
M	THUJA OCCIDENTALIS	NORTHERN WHITE CEDAR	31	24"

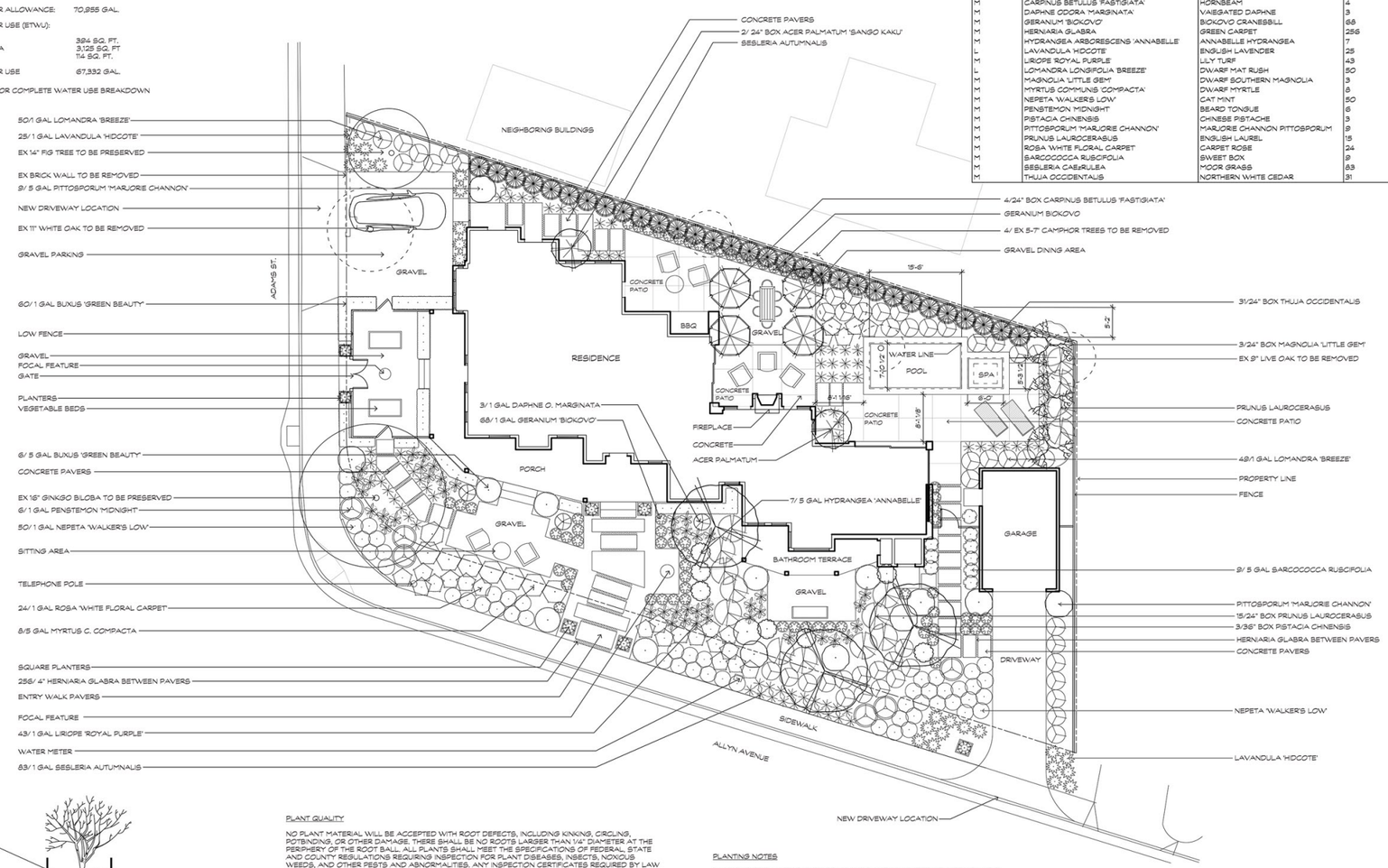

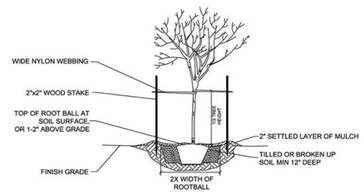

TREE PLANTING DETAIL
SCALE: NTS

PLANT QUALITY

NO PLANT MATERIAL WILL BE ACCEPTED WITH ROOT DEFECTS, INCLUDING KINKING, CIRCLING, POTBINDING, OR OTHER DAMAGE. THERE SHALL BE NO ROOTS LARGER THAN 1/4" DIAMETER AT THE PERIMERY OF THE ROOT BALL. ALL PLANTS SHALL MEET THE SPECIFICATIONS OF FEDERAL, STATE AND COUNTY REGULATIONS REQUIRING INSPECTION FOR PLANT DISEASES, INSECTS, NOXIOUS WEEDS, AND OTHER PESTS AND ABNORMALITIES. ANY INSPECTION CERTIFICATES REQUIRED BY LAW MUST ACCOMPANY EACH SHIPMENT, INVOICE, MANIFEST OR ORDER OF STOCK. TRANSPORTING, HANDLING, DELIVERY AND STORAGE OF PLANTS SHALL BE CONDUCTED TO PROTECT AT ALL TIMES FROM INJURY, DESICCATION AND FREEZING. PROTECT CONTAINERS FROM SUN EXPOSURE. SINGLE-STEMMED TREES SHALL HAVE PROPER TRUNK TAPER AND ABILITY TO STAND WITHOUT SUPPORT. THE BRANCHING STRUCTURE OF TREES SHALL BE RADIALLY AND VERTICALLY WELL BALANCED WITH STRONG ATTACHMENT TO THE TRUNK. TOP GROWTH SHALL EXHIBIT GOOD VISOR TYPICAL FOR THE SPECIES AND THE SEASON AS INDICATED BY LEAF COLOR AND SIZE, LENGTH OF TERMINAL GROWTH AND COLOR, AND CONDITION OF THE BARK. NONE OF THE PLANTS SHALL HAVE SERIOUSLY BROKEN, FROZEN, SHRIVELED OR DAMAGED LEADERS OR MAIN BRANCHES.

INSTALLATION

AT LEAST ONE PLANT IN EACH SPECIES SHALL BE TAGGED WITH IDENTIFICATION. LOCATION OF PLANTS IS DIAGRAMMATIC. ALL CONTAINER-GROWTH PLANTS SHALL BE SET IN PLACE ACCORDING TO THE PLAN FOR APPROVAL OF THE OWNERS' REPRESENTATIVE PRIOR TO INSTALLATION. PRUNE PLANTS ONLY TO REMOVE DAMAGED LEAVES, BRANCHES AND SPENT FLOWERS AND TO IMPROVE BRANCHING STRUCTURE AND SHAPE.

PLANTING NOTES

1. LAYOUT OF PLANTING IS DIAGRAMMATIC AND MAY NEED ADJUSTING IN THE FIELD DEPENDING ON SITE CONDITIONS AND PLANT AVAILABILITY.
2. ALL PLANTS TO BE PLACED IN THE FIELD BY ROZANSKI DESIGN.
3. ALL PLANTS TO BE PLANTED WITH PREMIUM PLANTING MIX.
4. ALL PLANTS TO BE SELECTED BY ROZANSKI DESIGN AND ALL SUBSTITUTIONS MUST BE APPROVED IN ADVANCE.
5. PLANTED AREAS SHALL BE COVERED WITH AT LEAST 3" OF ARBOR MULCH.

SOIL & MULCH NOTES

1. THERE SHALL BE A MINIMUM OF 8" OF NON-MECHANICALLY COMPACTED SOIL IN PLANTED AREAS FOR WATER ABSORPTION AND ROOT GROWTH.
2. COMPOST SHALL BE INCORPORATED INTO THE SOIL TO A DEPTH OF AT LEAST 8".
3. ALL EXPOSED SOIL SURFACES OF PLANTED AREAS SHALL BE COVERED WITH ARBOR MULCH AT A DEPTH OF AT LEAST 3".

duran-pon residence

PLANTING PLAN
SCALE: 1"=20'-0" DATE: 12/16/16
1405 Adams St
St. Helena, CA 94574 APN: 009-304-013

rozanski design
20820 broadway, suite c
sonoma, ca, 95476
707.343.1932

License #963723
www.rozanskidesign.com

WATER USE BREAKDOWN:

MAXIMUM APPLIED WATER ALLOWANCE (MAWA)

TOTAL LANDSCAPE AREA:	3,633 SQ. FT.
SPECIAL LANDSCAPE AREA:	0
MAXIMUM APPLIED WATER ALLOWANCE:	70,955 GAL.

ESTIMATED TOTAL WATER USE (ETWU):

LOW WATER USE AREA	394 SQ. FT.
MEDIUM WATER USE AREA	3,125 SQ. FT
HIGH WATER USE AREA	114 SQ. FT.
ESTIMATED TOTAL WATER USE	67,332 GAL.

*SEE ATTACHED FORMS FOR COMPLETE WATER USE BREAKDOWN

PLANTING LEGEND

WATER USE	BOTANICAL NAME	COMMON NAME	QUANTITY	SIZE
M	ACER PALMATUM 'SANGO KAKU'	JAPANESE MAPLE	2	24"
M	BUXUS 'GREEN BEAUTY'	BOXWOOD	60	1 GAL
M	BUXUS 'GREEN BEAUTY'	GLOBE BOXWOOD	6	5 GAL
M	CARPINUS BETULUS 'FASTIGIATA'	HORNBEAM	4	24"
M	DAPHNE ODORA 'MARGINATA'	VAIEGATED DAPHNE	3	1 GAL
M	GERANIUM 'BIOKOVO'	BIOKOVO CRANESBILL	68	1 GAL
M	HERNIARIA GLABRA	GREEN CARPET	256	4"
M	HYDRANGEA ARBORESCENS 'ANNABELLE'	ANNABELLE HYDRANGEA	7	5 GAL
L	LAVANDULA 'HIDCOTE'	ENGLISH LAVENDER	25	1 GAL
M	LIRIOPE 'ROYAL PURPLE'	LILY TURF	43	1 GAL
L	LOMANDRA LONGIFOLIA 'BREEZE'	DWARF MAT RUSH	50	1 GAL
M	MAGNOLIA 'LITTLE GEM'	DWARF SOUTHERN MAGNOLIA	3	24"
M	MYRTUS COMMUNIS 'COMPACTA'	DWARF MYRTLE	8	5 GAL
M	NEPETA 'WALKER'S LOW'	CAT MINT	50	1 GAL
M	PENSTEMON 'MIDNIGHT'	BEARD TONGUE	6	1 GAL
M	PISTACIA CHINENSIS	CHINESE PISTACHE	3	36"
M	PITTOSPORUM 'MARJORIE CHANNON'	MARJORIE CHANNON PITTOSPORUM	9	5 GAL
M	PRUNUS LAUROCERASUS	ENGLISH LAUREL	15	24"
M	ROSA 'WHITE FLORAL CARPET'	CARPET ROSE	24	1 GAL
M	SARCOCOCCA RUSCIFOLIA	SWEET BOX	9	5 GAL
M	SESLERIA CAEsRULEA	MOOR GRASS	83	1 GAL
M	THUJA OCCIDENTALIS	NORTHERN WHITE CEDAR	31	24"

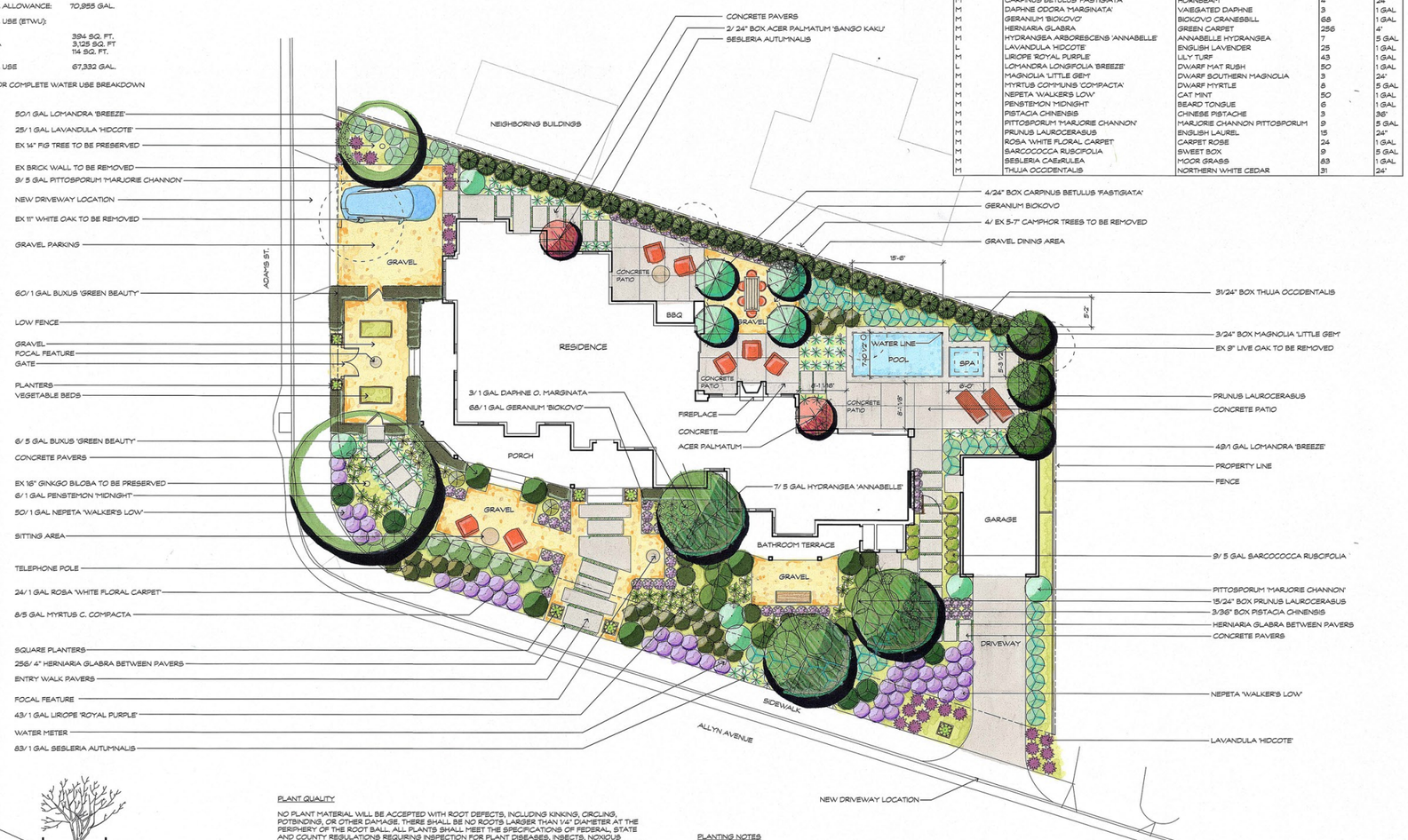

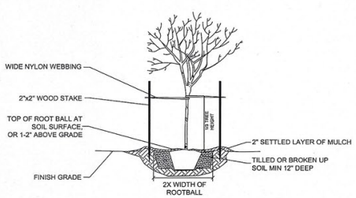

TREE PLANTING DETAIL
SCALE: NTS

PLANT QUALITY

NO PLANT MATERIAL WILL BE ACCEPTED WITH ROOT DEFECTS, INCLUDING KINKING, CIRCLING, POTBINDING, OR OTHER DAMAGE. THERE SHALL BE NO ROOTS LARGER THAN 1/4" DIAMETER AT THE PERIPHERY OF THE ROOT BALL. ALL PLANTS SHALL MEET THE SPECIFICATIONS OF FEDERAL, STATE AND COUNTY REGULATIONS REQUIRING INSPECTION FOR PLANT DISEASES, INSECTS, NOXIOUS WEEDS, AND OTHER PESTS AND ABNORMALITIES. ANY INSPECTION CERTIFICATES REQUIRED BY LAW MUST ACCOMPANY EACH SHIPMENT, INVOICE, MANIFEST OR ORDER OF STOCK. TRANSPORTING, HANDLING, DELIVERY AND STORAGE OF PLANTS SHALL BE CONDUCTED TO PROTECT AT ALL TIMES FROM INJURY, DESICCATION AND FREEZING. PROTECT CONTAINERS FROM SUN EXPOSURE. SINGLE-STEMMED TREES SHALL HAVE PROPER TRUNK TAPER AND ABILITY TO STAND WITHOUT SUPPORT. THE BRANCHING STRUCTURE OF TREES SHALL BE RADIALLY AND VERTICALLY WELL BALANCED WITH STRONG ATTACHMENT TO THE TRUNK. TOP GROWTH SHALL EXHIBIT GOOD VIGOR TYPICAL FOR THE SPECIES AND THE SEASON AS INDICATED BY LEAF COLOR AND SIZE, LENGTH OF TERMINAL GROWTH AND COLOR, AND CONDITION OF THE BARK. NONE OF THE PLANTS SHALL HAVE SERIOUSLY BROKEN, FROZEN, SHRIVELED OR DAMAGED LEADERS OR MAIN BRANCHES.

INSTALLATION

AT LEAST ONE PLANT IN EACH SPECIES SHALL BE TAGGED WITH IDENTIFICATION, LOCATION OF PLANTS IS DIAGRAMMATIC. ALL CONTAINER-GROWTH PLANTS SHALL BE SET IN PLACE ACCORDING TO THE PLAN FOR APPROVAL OF THE OWNERS' REPRESENTATIVE PRIOR TO INSTALLATION. PRUNE PLANTS ONLY TO REMOVE DAMAGED LEAVES, BRANCHES AND SPENT FLOWERS AND TO IMPROVE BRANCHING STRUCTURE AND SHAPE.

PLANTING NOTES

1. LAYOUT OF PLANTING IS DIAGRAMMATIC AND MAY NEED ADJUSTING IN THE FIELD DEPENDING ON SITE CONDITIONS AND PLANT AVAILABILITY.
2. ALL PLANTS TO BE PLACED IN THE FIELD BY ROZANSKI DESIGN.
3. ALL PLANTS TO BE PLANTED WITH PREMIUM PLANTING MIX.
4. ALL PLANTS TO BE SELECTED BY ROZANSKI DESIGN AND ALL SUBSTITUTIONS MUST BE APPROVED IN ADVANCE.
5. PLANTED AREAS SHALL BE COVERED WITH AT LEAST 3" OF ARBOR MULCH.

SOIL & MULCH NOTES

1. THERE SHALL BE A MINIMUM OF 8" OF NON-MECHANICALLY COMPACTED SOIL IN PLANTED AREAS FOR WATER ABSORPTION AND ROOT GROWTH.
2. COMPOST SHALL BE INCORPORATED INTO THE SOIL TO A DEPTH OF AT LEAST 8".
3. ALL EXPOSED SOIL SURFACES OF PLANTED AREAS SHALL BE COVERED WITH ARBOR MULCH AT A DEPTH OF AT LEAST 3".

duran-pon residence

PLANTING PLAN
SCALE: 1"=20'-0" DATE: 12/16/16
1405 Adams St
St. Helena, CA 94574 APN: 009-304-013

rozanski design
20820 broadway, suite c
sonoma, ca. 95476
707.343.1932
License #963723
www.rozanskidesign.com

IRRIGATION NOTES

THE LANDSCAPE CONTRACTOR SHALL DESIGN AND INSTALL A FULLY AUTOMATIC IRRIGATION SYSTEM TO PROVIDE FULL AND THOROUGH COVERAGE TO ALL NEWLY PLANTED AREAS SHOWN ON THE PLANTING PLAN. THE SYSTEM DESIGN SHALL ACCOMMODATE THE WATER REQUIREMENTS OF THE CALIFORNIA NATIVE MATERIALS AND ORNAMENTALS, AND PROVIDE FOR SEPARATE VALVES FOR EACH EXPOSURE AND AS REQUIRED. DRIP EMITTERS WITH FLEXIBLE TUBING SHALL BE INSTALLED AT EACH PLANT. IN AREAS DENSELY PLANTED WITH 4" SIZE MATERIALS, ONE EMITTER MAY SUFFICE FOR 2 OR 3 PLANTS. ALL EQUIPMENT SHALL BE INSTALLED IN ACCORDANCE WITH ALL ORDINANCES AND CODES OF THE CITY OF LAFAYETTE AND CONTRA COSTA COUNTY.

ALL MAINLINE PIPING AND CONTROL WIRING SHALL BE INSTALLED IN SEPARATE SCHEDULE 40 PVC SLEEVES. NOMINAL TWO SIZES LARGER THAN THE IRRIGATION PIPE, AND NOT LESS THAN 4" IN DIAMETER. SLEEVES SHALL BE BURIED A MINIMUM OF 21-0" BELOW FINISHED GRADE AND BACKFILLED WITH GRAVEL NOT TO EXCEED 1/2" PARTICLE SIZE. NO LARGE ROCKS OR EXTRANEOUS MATERIALS WILL BE USED IN TRENCH BACKFILL. EXTEND SLEEVES A MINIMUM OF 4" BEYOND ALL PAVING, WALLS, ETC. THE 'HUNTER I-CORE' CONTROLLER SHALL BE INSTALLED AS DIRECTED BY THE OWNER. PROVIDE TWO SETS OF KEYS TO THE CONTROLLER TO THE OWNER, AS WELL AS FULL INSTRUCTION ON THE OPERATION OF THE CONTROLLER. THE INSTALLER SHALL REVIEW THE PLANNED SYSTEM WITH THE OWNERS' REPRESENTATIVE PRIOR TO INSTALLATION.

1. HUNTER I-CORE IRRIGATION CONTROLLER WILL BE INSTALLED TO CONTROL THE IRRIGATION SCHEDULE.
2. RAIN SENSOR WILL BE INSTALLED FOR THE I-CORE CONTROLLER.
3. ALL VALVES WILL BE ANTI-SIPHON AND PRESSURE REGULATED.
4. ALL TREES TO BE PLACED ON A SEPARATE VALVE.
5. CHECK VALVE AND BACK FLOW VALVE TO BE INSTALLED.
6. ALL PLANTS ARE TO IRRIGATED WITH 1/2" DRIP TUBING AND 2 GPH EMITTERS.
7. TURF WILL BE IRRIGATED WITH MP ROTATORS (HUNTER), USING IN-LINE EMITTERS BETWEEN THE PAVERS.
8. IRRIGATION LAYOUT IS DIAGRAMMATIC AND INTENDED TO SHOW GENERAL LOCATIONS, FIELD ADJUSTMENTS MAY BE NECESSARY.

IRRIGATION NOTES

1. HUNTER I-CORE IRRIGATION CONTROLER WILL BE INSTALLED TO CONTROL THE IRRIGATION SCHEDULE.
2. RAIN SENSOR WILL BE INSTALLED FOR THE I-CORE CONTROLLER.
3. ALL VALVES WILL BE ANTI-SIPHON AND PRESSURE REGULATED.
4. ALL TREES TO BE PLACED ON A SEPERATE VALVE.
5. CHECK VALVE AND BACK FLOW VALVE TO BE INSTALLED.
6. ALL PLANTS ARE TO IRRIGATED WITH 1/2" DRIP TUBING AND 2 GPM EMITTERS.
7. TURF WILL BE IRRIGATED WITH MP ROTARS, USING IN-LINE EMITTERS BETWEEN THE PAVERS AND ALONG THE POOL COPING EDGE.
8. IRRIGATION LAYOUT IS DIAGRAMMATIC AND INTENDED TO SHOW GENERAL LOCATIONS, FIELD ADJUSTMENTS MAY BE NECCESSARY.

IRRIGATION TABLE

HYDROZONE	IRRIGATION	PLANTING TYPE
ZONE 1	DRIP	NORTH DRIVEWAY
ZONE 2	DRIP	NORTHWEST ENTRY
ZONE 3	DRIP	NORTH SIDEWALK
ZONE 4	DRIP	NORTHEAST ENTRY
ZONE 5	DRIP	SOUTHEAST PARKING
ZONE 6	DRIP	SOUTH ENTRY
ZONE 7	DRIP	SOUTHERN HEDGING
ZONE 8	DRIP	POOL AREA
ZONE 9	DRIP	EAST ENTRY
ZONE 10	N/A	POOL

IRRIGATION LEGEND:

DRIP IRRIGATED HYDROZONE

POOL AREA (HIGH WATER)

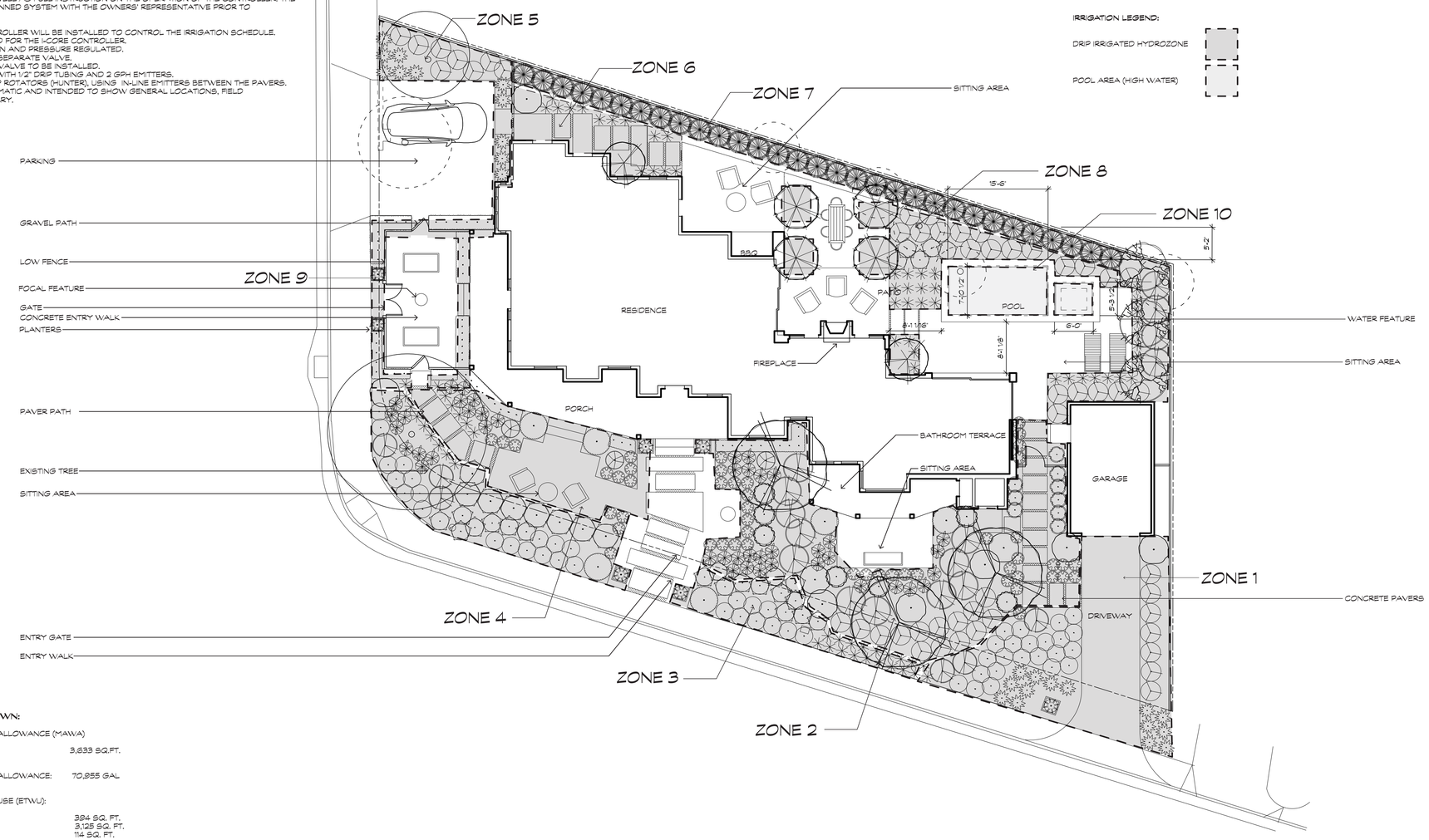

WATER USE BREAKDOWN:

MAXIMUM APPLIED WATER ALLOWANCE (MAWA)

TOTAL LANDSCAPE AREA: 3,633 SQ.FT.

MAXIMUM APPLIED WATER ALLOWANCE: 70,955 GAL

ESTIMATED TOTAL WATER USE (ETWU):

LOW WATER USE AREA 394 SQ. FT.
MEDIUM WATER USE AREA 3,125 SQ. FT.
HIGH WATER USE AREA 114 SQ. FT.

ESTIMATED TOTAL WATER USE 67,332 GAL

*SEE ATTACHED FORMS FOR COMPLETE WATER USE BREAKDOWN

Date:	Revision
12/15/16	CT

duran/pon residence

HYRDROZONE PLAN

Scale: 1/8" = 1'-0"

1405 Adams Street
St. Helena, CA

APN: 009-304-013

rozanski design

20820 broadway, suite c
sonoma, ca, 95476
707.343.1932

License #963723
www.rozanskidesign.com

WATER USE BREAKDOWN:

MAXIMUM APPLIED WATER ALLOWANCE (MAWA)

TOTAL LANDSCAPE AREA:	3,633 SQ. FT.
SPECIAL LANDSCAPE AREA:	0
MAXIMUM APPLIED WATER ALLOWANCE:	70,955 GAL.

ESTIMATED TOTAL WATER USE (ETWU):

LOW WATER USE AREA	394 SQ. FT.
MEDIUM WATER USE AREA	3,125 SQ. FT
HIGH WATER USE AREA	114 SQ. FT.
ESTIMATED TOTAL WATER USE	67,332 GAL.

*SEE ATTACHED FORMS FOR COMPLETE WATER USE BREAKDOWN

PLANTING LEGEND

WATER USE	BOTANICAL NAME	COMMON NAME	QUANTITY	SIZE
M	ACER PALMATUM 'SANGO KAKU'	JAPANESE MAPLE	2	24"
M	BUXUS 'GREEN BEAUTY'	BOXWOOD	60	1 GAL
M	BUXUS 'GREEN BEAUTY'	GLOBE BOXWOOD	6	5 GAL
M	CARPINUS BETULUS 'FASTIGIATA'	HORNBEAM	4	24"
M	DAPHNE ODORA 'MARGINATA'	VAIEGATED DAPHNE	3	1 GAL
M	GERANIUM 'BIOKOVO'	BIOKOVO CRANESBILL	68	1 GAL
M	HERNIARIA GLABRA	GREEN CARPET	256	4"
M	HYDRANGEA ARBORESCENS 'ANNABELLE	ANNABELLE HYDRANGEA	7	5 GAL
L	LAVANDULA 'HIDCOTE'	ENGLISH LAVENDER	25	1 GAL
M	LIROPE 'ROYAL PURPLE'	LILY TURF	43	1 GAL
L	LOMANDRA LONGIFOLIA 'BREEZE'	DWARF MAT RUSH	50	1 GAL
M	MAGNOLIA 'LITTLE GEM'	DWARF SOUTHERN MAGNOLIA	3	24"
M	MYRTUS COMMUNIS 'COMPACTA'	DWARF MYRTLE	8	5 GAL
M	NEPETA WALKERS LOW'	CAT MINT	50	1 GAL
M	PENSTEMON 'MIDNIGHT'	BEARD TONGUE	6	1 GAL
M	PISTACIA CHINENSIS	CHINESE PISTACHE	3	36"
M	PITTOSPORUM 'MARJORIE CHANNON'	MARJORE CHANNON PITTOSPORUM	9	5 GAL
M	PRUNUS LAUROCERASUS	ENGLISH LAUREL	15	24"
M	ROSA WHITE FLORAL CARPET	CARPET ROSE	24	1 GAL
M	SARCOCOCCA RUSCIFOLIA	SWEET BOX	9	5 GAL
M	SESLERIA CAEzRULEA	MOOR GRASS	83	1 GAL
M	THUJA OCCIDENTALIS	NORTHERN WHITE CEDAR	31	24"

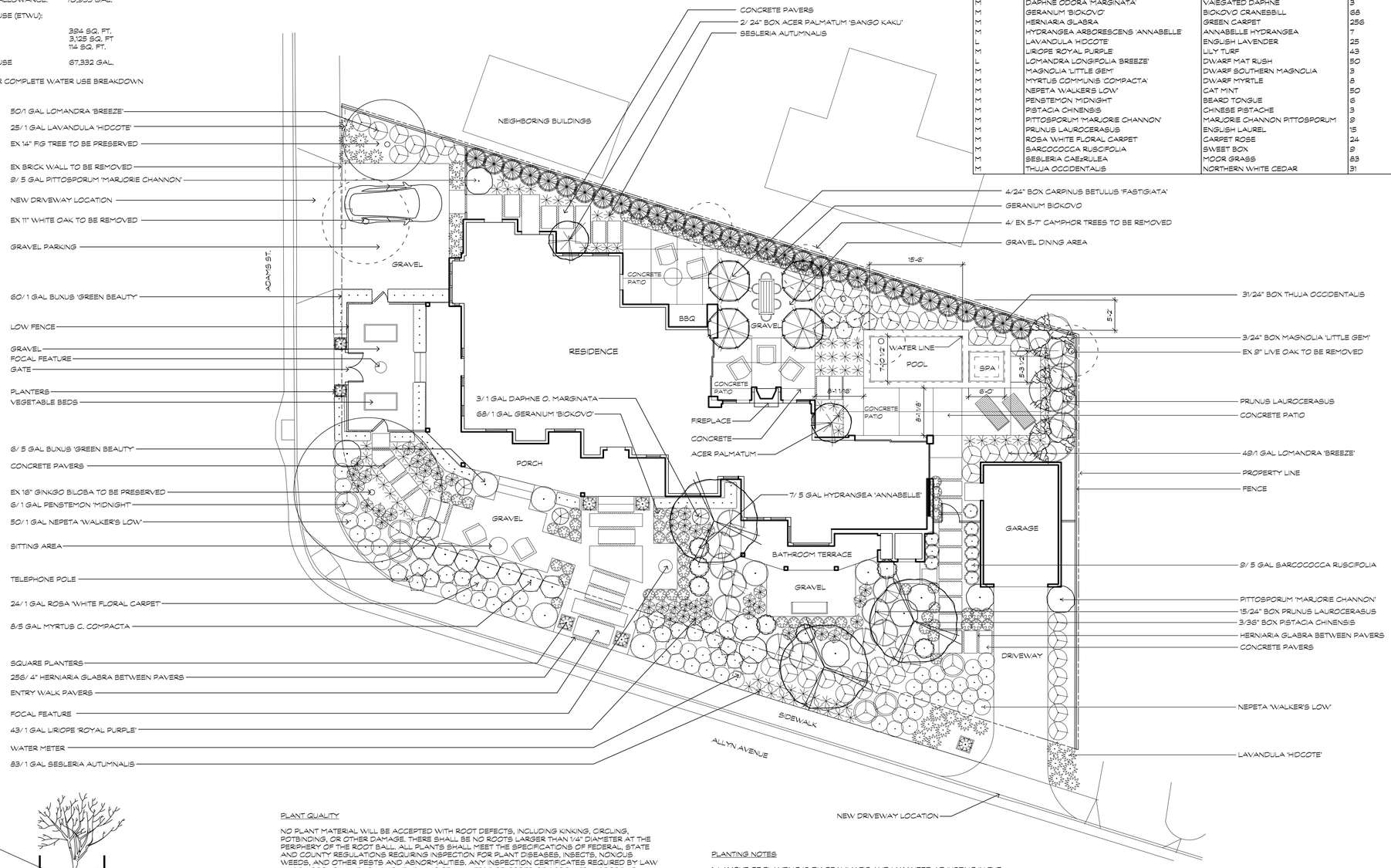

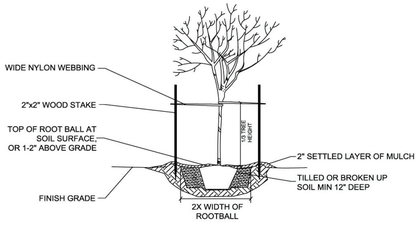

TREE PLANTING DETAIL
SCALE: NTS

PLANT QUALITY

NO PLANT MATERIAL WILL BE ACCEPTED WITH ROOT DEFECTS, INCLUDING KINKING, CIRCLING, POTBINDING, OR OTHER DAMAGE. THERE SHALL BE NO ROOTS LARGER THAN 1/4" DIAMETER AT THE PERIPHERY OF THE ROOT BALL. ALL PLANTS SHALL MEET THE SPECIFICATIONS OF FEDERAL, STATE AND COUNTY REGULATIONS REQUIRING INSPECTION FOR PLANT DISEASES, INSECTS, NOXIOUS WEEDS, AND OTHER PESTS AND ABNORMALITIES. ANY INSPECTION CERTIFICATES REQUIRED BY LAW MUST ACCOMPANY EACH SHIPMENT, INVOICE, MANIFEST OR ORDER OF STOCK. TRANSPORTING, HANDLING, DELIVERY AND STORAGE OF PLANTS SHALL BE CONDUCTED TO PROTECT AT ALL TIMES FROM INJURY, DESICCATION AND FREEZING. PROTECT CONTAINERS FROM SUN EXPOSURE. SINGLE-STEMMED TREES SHALL HAVE PROPER TRUNK TAPER AND ABILITY TO STAND WITHOUT SUPPORT. THE BRANCHING STRUCTURE OF TREES SHALL BE RADIALLY AND VERTICALLY WELL BALANCED WITH STRONG ATTACHMENT TO THE TRUNK. TOP GROWTH SHALL EXHIBIT GOOD VIGOR TYPICAL FOR THE SPECIES AND THE SEASON AS INDICATED BY LEAF COLOR AND SIZE, LENGTH OF TERMINAL GROWTH AND COLOR, AND CONDITION OF THE BARK. NONE OF THE PLANTS SHALL HAVE SERIOUSLY BROKEN, FROZEN, SHRIVELED OR DAMAGED LEADERS OR MAIN BRANCHES.

INSTALLATION

AT LEAST ONE PLANT IN EACH SPECIES SHALL BE TAGGED WITH IDENTIFICATION. LOCATION OF PLANTS IS DIAGRAMMATIC. ALL CONTAINER-GROWTH PLANTS SHALL BE SET IN PLACE ACCORDING TO THE PLAN FOR APPROVAL OF THE OWNERS' REPRESENTATIVE PRIOR TO INSTALLATION. PRUNE PLANTS ONLY TO REMOVE DAMAGED LEAVES, BRANCHES AND SPENT FLOWERS AND TO IMPROVE BRANCHING STRUCTURE AND SHAPE.

PLANTING NOTES

1. LAYOUT OF PLANTING IS DIAGRAMMATIC AND MAY NEED ADJUSTING IN THE FIELD DEPENDING ON SITE CONDITIONS AND PLANT AVAILABILITY.
2. ALL PLANTS TO BE PLACED IN THE FIELD BY ROZANSKI DESIGN.
3. ALL PLANTS TO BE PLANTED WITH PREMIUM PLANTING MIX.
4. ALL PLANTS TO BE SELECTED BY ROZANSKI DESIGN AND ALL SUBSTITUTIONS MUST BE APPROVED IN ADVANCE.
5. PLANTED AREAS SHALL BE COVERED WITH AT LEAST 3" OF ARBOR MULCH.

SOIL & MULCH NOTES

1. THERE SHALL BE A MINIMUM OF 8" OF NON-MECHANICALLY COMPACTED SOIL IN PLANTED AREAS FOR WATER ABSORPTION AND ROOT GROWTH.
2. COMPOST SHALL BE INCORPORATED INTO THE SOIL TO A DEPTH OF AT LEAST 8".
3. ALL EXPOSED SOIL SURFACES OF PLANTED AREAS SHALL BE COVERED WITH ARBOR MULCH AT A DEPTH OF AT LEAST 3".

0 2 4 8 16

N

Date:	Revision
12/15/16	CL

duran/pon residence

PLANTING PLAN

Scale: 1/8" = 1'-0"

1405 Allyn Ave
St. Helena, CA

APN: 009-304-013

rozanski design
20820 broadway, suite c
sonoma, ca, 95476
707.343.1932

License #963723
www.rozanskidesign.com

DELTA CONSULTING & ENGINEERING
OF ST. HELENA

THEORETICAL
WATER USE REPORT

FOR

1405 ADAMS STREET RESIDENCE

LOCATED AT

1405 ADAMS STREET
ST. HELENA, CA 94574

COUNTY: NAPA
NCAPN: 009-304-013

NOVEMBER 23, 2015

PREPARED FOR REVIEW BY:
CITY OF ST. HELENA DEPARTMENT OF PUBLIC WORKS
1480 MAIN STREET
ST. HELENA, CA 94574

REGISTERED PROFESSIONAL ENGINEER
BRYAN C. JACKSON
No. 80603
Exp. 03-31-17
CIVIL
STATE OF CALIFORNIA

1104 ADAMS STREET, SUITE 203, ST. HELENA, CALIFORNIA 94574
707-963-8456 TELE + WWW.DELTACIVIL.COM 707-963-8528 FAX

DELTA CONSULTING & ENGINEERING
OF ST. HELENA

TABLE OF CONTENTS

TABLE OF CONTENTS		I
I.	BACKGROUND & INTRODUCTION	- 1 -
II.	WATER-USE ANALYSIS	- 1 -
III.	CONCLUSION	- 4 -

DELTA CONSULTING & ENGINEERING
OF ST. HELENA

I. BACKGROUND & INTRODUCTION

The subject parcel located at 1405 Adams Street in Saint Helena (APN 009-304-013) is currently an empty lot with no water usage. The owner proposes to construct a new 4-bedroom residence with a pool and landscaping.

The City of Saint Helena current definition of 'Safe Water Yield' requires all new development within the city be water-neutral. This means the post-construction water use of a property must be less than or equal to the pre-construction water use. This report discusses the existing and proposed water demand for the property.

II. WATER-USE ANALYSIS

A. Baseline Water Use

The baseline water use for the property is based on the existing water use from the City of St. Helena Municipal Water System for both domestic (internal) uses and irrigation (external) uses. Internal water use includes water derived within any on-site structure. The external water use for the development includes water used in the irrigation for landscaping.

In this case, the project site is undeveloped, providing a zero baseline with respect to water usage.

B. Proposed Internal Water Use

By utilizing low-flow and water-efficient fixtures in the proposed residence, the anticipated internal water requirements are able to be significantly reduced from water used in non-water efficient homes. This report estimates 2-persons will occupy each bedroom in the proposed residence, for a total of eight persons living in the residence. The following is a list of low-flow fixtures and appliances, which can be found in Appendix A, proposed to be used in the new residence:

- Installation of high-efficiency toilets in all bathrooms (1.28 gpf)
- Installation of low flow kitchen and lavatory faucets (1.5 gpm)
- Installation of low-flow showerhead (1.5 gpm)
- Installation of a clothes washer listed on the Consortium for Energy Efficiency's 'Super Efficient Home Appliance Initiative Dishwasher Qualifying Product List'.[1] (<5 gal/cu. Ft)
- Installation of a dish washer listed on the Consortium for Energy Efficiency's 'Super Efficient Home Appliance Initiative Dishwasher Qualifying Product List'.[2] (< 4 gal/cycle)

Utilizing the above-noted fixtures in the proposed residence, the daily and annual water demands for the property after construction is able to be estimated as follows:

[1] "Super Efficient Home Appliance Initiative Clothes Washer Qualifying Product List" *Consortium for Energy Efficiency* <http://www.cee1.org/resid/seha/rwsh/rwsh-prod.pdf>
[2] Super Efficient Home Appliance Initiative Dish Washer Qualifying Product List" *Consortium for Energy Efficiency* <http://www.cee1.org/resid/seha/dishw/dw-prod.pdf>

DELTA CONSULTING & ENGINEERING
OF ST. HELENA

PROPOSED RESIDENTIAL DAILY WATER USE WITH LOW FLOW FIXTURES

	Average Flow	Duration	Daily Use	Occupants	Total Daily Water Use	Total Annual Water Use	Total Annual Water Use
Toilet	1.28 gpf		3	8	30.7 gal	11,213 gal	0.26 af
Lavatory Faucet	1.5 gpm	0.25 min	3	8	9.00 gal	3,285.00 gal	0.08 af
Kitchen Faucet	1.5 gpm	4 min	1	8	48.0 gal	17,520 gal	0.40 af
Shower Head	1.5 gpm	8 min	1	8	96 gal	35,040 gal	0.80 af
Bath	22 gal		0.063	8	11.0 gal	4,015 gal	0.09 af
Clothes Washer	12 gal per load		0.125	8	12.00 gal	4,380.0 gal	0.10 af
Dish Washer	4 gal per cycle		0.125	8	4 gal	1,460 gal	0.03 af
Total					210.72 gal	76,913 gal	1.77 af

Assumptions:
1.) One load of laundy completed per day
2.) Dish washer is ran once per day
3.) One bath is taken every other day

The daily water use for the proposed residence with the low-flow water features as described above is estimated to be 210.7 gallons per day.

C. Proposed External Water Usage

The external water use on a project is derived from landscape irrigation and pool water use. The owner only proposes to install water-efficient landscaping requiring drip irrigation. Based on the size of the parcel and the proposed improvements, this report estimates installing ~ 2,500 square feet of drip-irrigation landscaping. Based on the calculations located in Appendix B, the irrigation for this landscaping is anticipated to require 7.4 gallons water per day.

New pools utilize water throughout the year to replenish water due to evaporative losses. The project proposes to install a new 500 square foot pool to be covered during non-used periods. According to the Department of Energy, pool evaporation is able to be reduced by 30-50% when pool covers are used. Based on the calculations included in Appendix C, the average daily water demand for a 500 square foot pool in St. Helena is 13.7 gallons water per day.

The total proposed external water use between irrigation and pool evaporation losses is 21.1 gallons per day.

D. Proposed Total Water Usage

Between the proposed internal and external water use for the project, the estimated water usage for the project is 231.82 gallons water per day.

III. OFF-SITE RETROFITS

A. Required Off-Site Retrofits

As the project has no baseline water usage, the project is required to perform off-site retrofits equivalent to the estimated project water usage of 231.82 gallons per day to become water neutral. To mitigate for this

DELTA CONSULTING & ENGINEERING
OF ST. HELENA

water usage, the owners plan on retrofitting the lavatory toilets and sinks in the Safeway in St. Helena. According to discussions with Safeway's manager Rich Bartlet, Safeway serves the residents of St. Helena, Angwin, Pope Valley and Calistoga, along with tourists and employees who travel to St. Helena every day. Safeway also contains some of the only public restrooms in St. Helena, making it a prime target for wine tasting vans and busses dropping off Clients specifically to use the restroom. The St. Helena Safeway averages approximately 60 employees per day, and is open to the public 20 hours per day from 5am to 1am. During 1am-5am, employees are on-site stocking shelves and organizing the store.

The store has three restrooms serving both employees and the public. The restroom in the back of the store is a uni-sex restroom with a single lavatory toilet and sink. The two restrooms in the front of the store are designated 'Male' and 'Female' respectively. The 'Male' restroom has one stall, one urinal, and one lavatory sink. The 'Female' restroom has two stalls and one lavatory sink.

In total, Safeway has (4) four toilets, (3) three lavatory sinks, and (1) urinal. Each toilet is flow-rated for 1.6 gallons per flush. Each lavatory sink is flow-rated for 2.2 gallons per minute. The single urinal in the 'Male' restroom is already low-flow at 0.5 gallons per flush. With this retrofit, the project owner's propose to retrofit the (4) four toilets and the (3) three lavatory sinks with low flow fixtures. The low-flow toilets will be rated at 1.28 gallons per flush, and the sinks will be rated at 0.5 gallons per minute.

In order to estimate the water savings based on the proposed retrofits, it is required to make some base assumptions with respect to the number of restroom trips made per day. This report assumes the following:

- Each person who uses the restroom will wash their hands for 15 seconds
- Each employee uses the restroom three times per shift
- The store is open 20 hours per day, with varying number of people per hour. Based on discussions with the store management, this report estimates 80 people enter the store per hour. This leads to the estimate of 1,600 people entering the store each day
- One in every five customers use the restroom (20%), leading to 320 bathroom trips per day
- Of the 320 bathroom trips per day, 15% will be men entering the 'Male' restroom and using the urinal, therefore leaving 272 bathroom trips utilizing the water-reduction savings from the toilet retrofit

Based on these assumptions see the calculations below analyzing the existing and proposed water usage based on the toilet and sink retrofits:

Table 1: Existing Toilet Water Usage

EXISTING PUBLIC DAILY TOILET USE

	Average Flow	Daily Use	Occupants	Total Daily Water Use
Safeway Toilets (Employees)	1.6 gpf	3	60	288 gal
Safeway Toilets (Public)*	1.6 gpf	1	272	435.2 gal
Total				723.2 gal

DELTA CONSULTING & ENGINEERING
OF ST. HELENA

Table 2: Proposed Toilet Water Usage

PROPOSED PUBLIC DAILY TOILET USE (with low-flow toilets)

	Average Flow	Daily Use	Occupants	Total Daily Water Use
Safeway Toilets (Employees)	1.28 gal	3	60	230.4 gal
Safeway Toilets (Public)	1.28 gal	1	272	348.16
Total				578.56 gal

Table 3: Existing Lavatory Sink Water Usage

EXISTING DAILY WATER USE PER CUSTOMER

	Average Flow	Duration	Daily Use	Occupants	Total Daily Water Use
Safeway Faucets (Employees)	2.2 gpm	0.25 min	3	60	99.0 gal
Safeway Faucets (Public)	2.2 gpm	0.25 min	1	320	176.0 gal
Total					275.0 gal

Table 4: Proposed Lavatory Sink Water Usage

PROPOSED DAILY WATER USE PER CUSTOMER (with reduced flow devices)

	Average Flow	Duration	Daily Use	Occupants	Total Daily Water Use
Safeway Faucets (Employees)	0.5 gpm	0.25 min	3	60	22.5 gal
Safeway Faucets (Public)	0.5 gpm	0.25 min	1	320	40.0 gal
Total					62.5 gal

Table 5: Total Reduction in Water Usage

TOTAL DAILY WATER FLOW REDUCTION

	Current Water Usage	Proposed Water Usage	Total Flow Reduction	
Safeway Toilets	723 gpd	578.56 gpd	144.64 gpd	0.16 AF/Year
Safeway Faucets	275 gpd	62.5 gpd	212.5 gpd	0.24 AF/Year
Total			357.14 gal	0.40 AF/Year

Based on these calculations, it is estimated the proposed retrofits at Safeway will save the City of St. Helena Municipal Water System 357.14 gallons of water per day.

IV. CONCLUSION

In order for the project to be considered water neutral, the estimated post-construction water use must be less than the current water use of the property. The project has a zero baseline water usage as the subject

DELTA CONSULTING & ENGINEERING
OF ST. HELENA

property is undeveloped and is not connected to the City of St. Helena Municipal Water System. The estimated water usage for the project is 231.82 gallons per day. With no baseline, the project is required to save the City the entirety of the proposed 231.82 gallons water per day with off-site retrofits.

By completing the retrofits to the Safeway located in the City of St. Helena as noted in this report, the project proposes to save the City approximately 357.14 gallons of water per day. This meets, and significantly exceeds, the City of St. Helena's water neutral requirements. This project, with the installation of low-flow devices in the residence and the aforementioned off-site retrofits, will meet the City of St. Helena's Water Neutral requirement.

DELTA CONSULTING & ENGINEERING
OF ST. HELENA

Appendix A

American Standard
Style That Works Better

RELIANT+
SINGLE CONTROL KITCHEN FAUCET
WITH CAST BRASS SPOUT

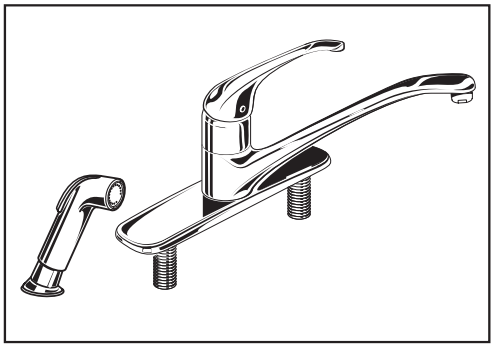

4205.001 Shown

MODEL NUMBER:

- ❑ **4205.001 Kitchen Faucet**
  Metal Lever Handle. Separate color-matched handspray.
- ❑ **4205.001.F15 Kitchen Faucet**
  Same as above. 1.5gpm flow rate.
- ❑ **4205.000 Kitchen Faucet**
  Metal Lever Handle. Less handspray.
- ❑ **4205.000.F15 Kitchen Faucet**
  Same as above. 1.5gpm flow rate.

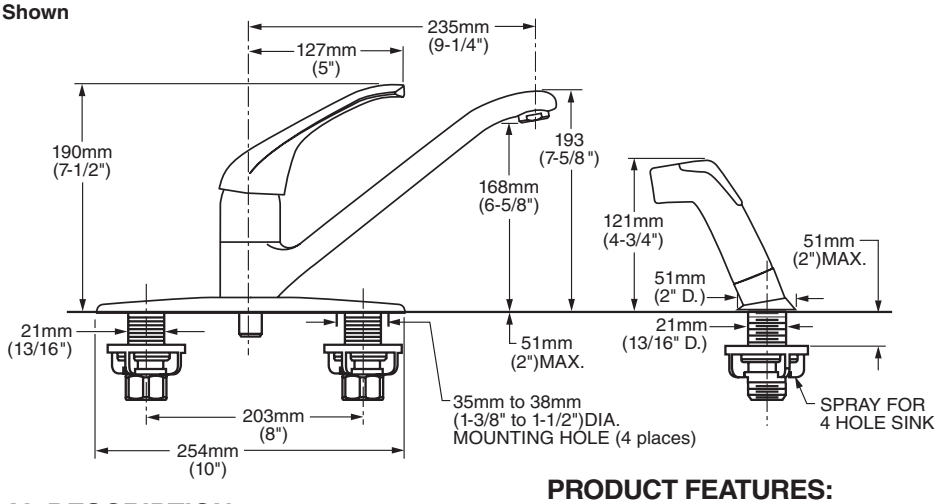

GENERAL DESCRIPTION:

Washerless 47mm ceramic disc valve cartridge with integral hot limit safety stop. Cast brass waterway with 1/2" male inlet shanks. Cast brass 9-1/4" (235mm) swivel spout, metal escutcheon plate (escutcheon size 10" L x 2-5/16" W), and metal handle. 2.2gpm/8.3L/min. maximum flow rate, 1.5gpm/5.7 L/min. maximum flow rate for F15 models.

PRODUCT FEATURES:

Ceramic Disc Valve Cartridge: Assures a lifetime of drip-free performance.

Cast Brass Waterway, Cast Brass Spout: Highest quality faucet materials for durability and long life.

Higher and Longer Spout: Spout designed to allow more room under spout and extended reach into the sink.

Memory Position Valving: Allows user to turn valve on and off at preferred temperature setting without readjusting handle position each time.

Adjustable Hot Limit Safety Stop: Limits the amount of hot water allowed to mix with cold. Reduces the risk of accidental scalding.

Lead Free: Faucet contains ≤ 0.25% total lead content by weighted average.

Simple Installation: Fast and easy one person installation. Faucet drops in from top. Quick-spin nuts secure faucet in place.

SUGGESTED SPECIFICATION:

Single control kitchen faucet shall feature a cast brass body and swivel spout, and all metal handle. Shall also feature washerless 47mm ceramic disc valve cartridge with integral hot limit safety stop. Fitting shall be American Standard Model # 4205.00_.___. ___

© 2010 AS America Inc.

Revised 3/11

American Standard
Style That Works Better

RELIANT+
SINGLE CONTROL KITCHEN FAUCET
WITH CAST BRASS SPOUT

CODES AND STANDARDS

These products meet or exceed the following codes and standards:

ANSI A117.1
ASME A112.18.1
CSA B 125
NSF 61/Section 9 & Annex G

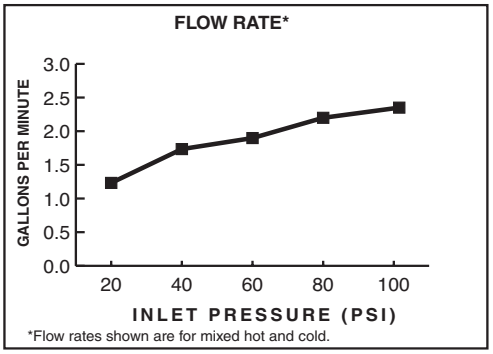

2.2gpm/8.3L/min. FLOW RATE

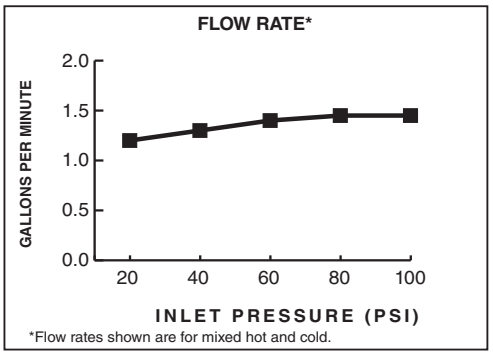

1.5gpm/5.7 L/min. FLOW RATE

Product Number	Description	Finish: Polished Chrome 002
4205.001	Kitchen faucet. Cast brass waterway with 1/2" male inlet shanks. Separate handspray.	
4205.001.F15	Same as above. 1.5gpm/5.7 L/min. flow rate.	
4205.000	Kitchen faucet. Cast brass waterway with 1/2" male inlet shanks. Less handspray.	
4205.000.F15	Same as above. 1.5gpm/5.7 L/min. flow rate.	

Meets the American Disabilities Act Guidelines and **ANSI A117.1** Requirements for the physically challenged.

© 2011 AS America Inc.

American Standard
Style That Works Better

HERITAGE

TWO-HANDLE 8" WIDESPREAD LAVATORY FAUCET
WITH GOOSENECK SPOUT

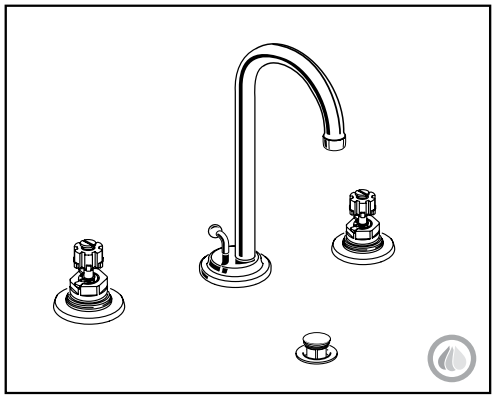

6831.000 Shown

MODEL NUMBER:

- **6830.000 8" Widespread Lavatory**
  Rigid gooseneck spout. 1.5 gpm pressure compensating aerator. Less drain. Less handles. Rigid copper connection.
- **6831.000 8" Widespread Lavatory**
  Rigid gooseneck spout. 1.5 gpm pressure compensating aerator. Pop-up drain. Less handles. Rigid copper connection.
- **6832.000 8" Widespread Lavatory**
  Rigid gooseneck spout. 1.5 gpm pressure compensating aerator. Grid strainer drain. Less handles. Rigid copper connection.

Handles must be ordered separately.

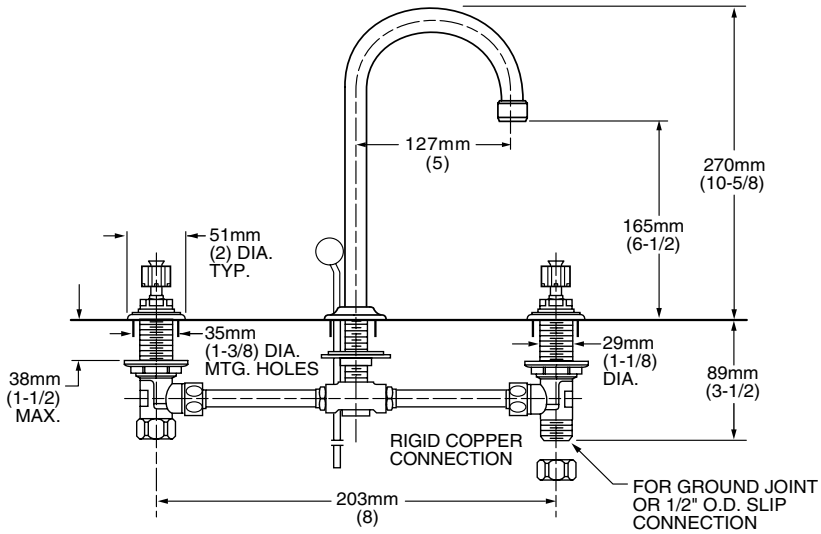

GENERAL DESCRIPTION:

Cast brass valve bodies with rigid copper 8" (203mm) connections. Amarilis 1/4 turn washerless ceramic disc valve cartridges. Fixed brass spout. One-half inch male inlet shanks with brass coupling nuts and shank nuts. All brass drain body (on applicable models) with 1-1/4" (32mm) tailpiece. 1.5gpm/5.7L/min. maximum flow rate.

PRODUCT FEATURES:

Pressure Compensating Aerator: Provides a constant water flow of 1.5 gpm throughout the pressure range.

Brass Construction: Durable - Excellent in high use applications. Ideal for prolonged contact with water.

Ceramic Disc Valve Cartridges: Assures a lifetime of drip-free performance.

Low Lead: Meets NSF Standard 61/Section 9 & Prop 65 lead requirements.

SUGGESTED SPECIFICATION:

Two handle widespread lavatory faucet shall feature cast brass valve bodies with 8" rigid copper connections. All brass shank nuts and coupling nuts. Shall feature water-conserving 1.5 gpm/5.7L/min. pressure compensating aerator. Shall also feature 1/4 turn washerless ceramic disc valve cartridges. Fitting shall be American Standard Model #680_.000.___ and handle kit # 0000.___.___.

© 2008 AS America Inc.

American Standard
Style That Works Better

HERITAGE

TWO-HANDLE 8" WIDESPREAD LAVATORY FAUCET

WITH GOOSENECK SPOUT

CODES AND STANDARDS

These products meet or exceed the following codes and standards:

ASME A112.18.1
CSA B 125
NSF 61/Section 9

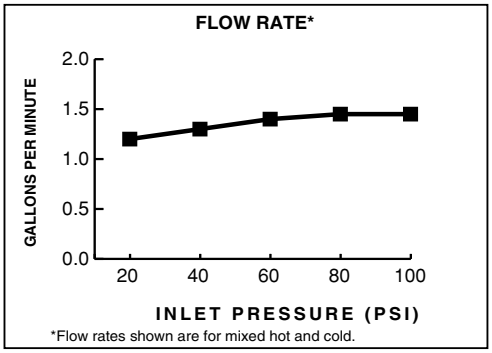

Product Number	Description	Finish: Polished Chrome 002
6830.000	Lavatory Faucet. 1.5 gpm/5.7L/min pressure compensating aerator. Less drain. Less handles.	
6831.000	Lavatory Faucet. 1.5 gpm/5.7L/min pressure compensating aerator. Pop-up drain. Less handles.	
6832.000	Lavatory Faucet. 1.5 gpm/5.7L/min pressure compensating aerator. Grid strainer drain. Less handles.	

Handles must be ordered separately.

The above fittings will accept the following Amarilis-Series handles.

Wrist Blade	Lever
372H 372V	342H 342V

Meets the American Disabilities Act Guidelines and **ANSI A117.1** Requirements for the physically challenged.

Other Aerators Available:

Part Suffix	Description
V15	1.5 gpm Pressure Compensating Vandal-Resistant Aerator
L15	1.5 gpm Pressure Compensating Laminar Flow
LV15	1.5 gpm Pressure Compensating Vandal-Resistant Laminar Flow Outlet
V05	0.5 gpm Pressure Compensating Vandal-Resistant Spray

© 2008 AS America Inc.

METERING FAUCETS
PILLAR TAP FAUCET
1.0 GPM

MODEL NUMBER:

- **1340.105** Cast spout, 1.0 GPM pressure compensating vandal-resistant aerator
- **1340M.105** Same as above with mechanical mixing valve
- **OPTIONAL 4" or 8" Deck plates**
  - ❑ 605P.400 4" brass deck plate with 1/4" fixation studs and quick spin nuts. (6-1/8" x 2-1/8" x 1/2")
  - ❑ 605P.800 8" brass deck plate with 1/4" fixation studs and quick spin nuts. (10-1/8" x 2-3/8" x 1/2")

GENERAL DESCRIPTION:
Metering pillar tap faucet. Vandal resistant solid brass construction. Easy-push handle. Water conserving pressure compensating 1.0 GPM aerator. Factory set for a maximum of 0.17 gallon flow per activation. Replaceable cartridge. Adjustable flow cycle.

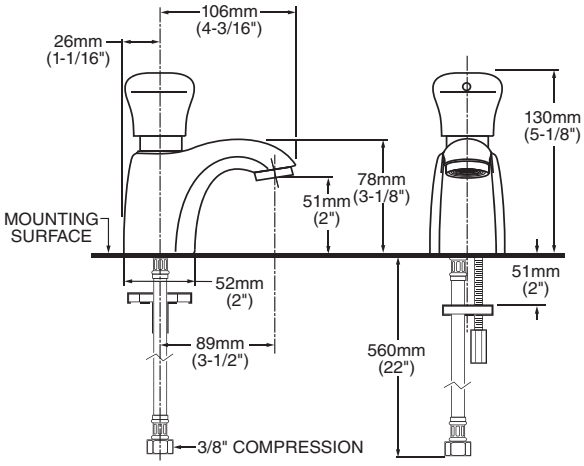

PRODUCT FEATURES:
- **Pressure Compensating Aerator:** Provides a constant water flow of 1.0 gpm throughout the pressure range.
- **Vandal-Resistant Brass Construction and Aerator:** Durable - Excellent in high use applications.
- **Automatic Shut-off:** Stops water and energy waste. Ideal for public restrooms where uncontrolled water usage is costly.
- **Meets ADA Standard:** Requires less than 5 lbs. of operating force to initiate flow per ANSI A117.1.
- **Single Supply:** For cold or tempered water.
- **Adjustable Flow Cycle**
- **Replaceable Valve Cartridge:** Facilitates simple replacement.
- **Optional Mixing Valves:** (sold separately)
  - Mechanical (Model # 021943-0070A)
  - Thermostatic (Model # 605XTMV1070)
- **Flexible Supply Hose:** With 3/8" Compression Connection
- **Optional 4" or 8" Deck Plate**
- **Meets CALGreen**
- **Lead Free:** Faucet contains ≤ 0.25% total lead content by weighted average.

SUGGESTED SPECIFICATION
Metering faucet shall feature a single handle vandal-resistant brass construction with a replaceable valve cartridge and an adjustable flow cycle. Shall also feature a water-conserving pressure compensating 1.0 gpm/3.8L/min vandal-resistant aerator. Factory set to maintain flow below the maximum 0.17 gallons per cycle required by ANSI A112.18.1M. Push button activator shall meet ANSI A117.1 Standard. Fitting shall be American Standard Model # 1340.105.002.

© 2013 AS America Inc.

METERING FAUCETS
PILLAR TAP FAUCET
1.0 GPM

CODES AND STANDARDS

These products meet or exceed the following codes and standards:

ANSI A117.1
ASME A112.18.1
CSA B 125
NSF 372

MEETS THE AMERICANS WITH DISABILITIES ACT GUIDELINES AND ANSI A117.1 REQUIREMENTS FOR ACCESSIBLE AND USABLE BUILDING FACILITIES-CHECK LOCAL CODES

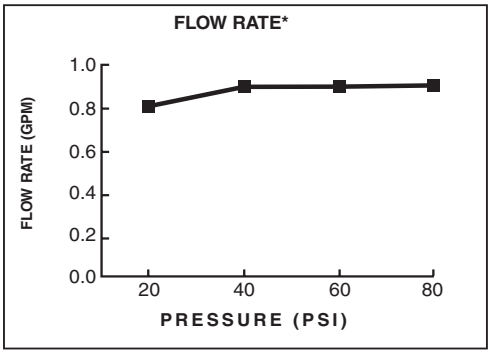

Other Aerators Available:

Part Suffix	Description
V15	1.5 gpm (5.7 Lpm) PCA Vandal-Resistant Aerator

*PCA - Pressure Compensating

© 2013 AS America Inc.

SLOAN®
Gravity Series

Model
WETS 9000-1.28
Two Piece Floor Mounted Elongated Toilet Tank System

DESCRIPTION

Complete two piece vitreous china, elongated, floor mounted toilet tank system.

Flush Cycle

☐Model WETS-9000.9010-1.28 gpf/4.8 Lpf (Left Handle)
- ST-9000-A 1.28 Bowl
- ST-9010-A 1.28 Left Handle Tank

☐Model WETS-9000.9110-1.28 gpf/4.8 Lpf (Right Handle)
- ST-9000-A 1.28 Bowl
- ST-9110-A 1.28 Right Handle Tank

HET HIGH-EFFICIENCY TOILET

Left Handle Model Shown

SPECIFICATIONS

Quiet, two piece toilet tank system with vitreous china floor mounted elongated water closet and compact tank for left handle or right handle with the following features:

Two Piece Toilet System
- Contemporary design
- Siphon jet flushing action
- Depending on model selected, available with a right or left handle
- Quiet powerful gravity flush
- Elongated bowl
- 12" rough-in
- 3" valve opening for better flush performance
- Vitreous china
- Integral trap
- Color matched floor caps
- 2 ⅛" fully glazed trapway
- Water pressure range: 25 to 80 PSI
- Tank and bowl must be ordered as two (2) separate items
- Water spot area 7 ⅞" x 6 ¼"
- Easy handle actuation
- Water supply not included
- Toilet seat not included
- Compatible with toilet seat models: Olsonite 10CT, Bemis 1955CT & Church Commercial 295CT
- Toilet tank system is in compliance to the applicable sections of ASME A112.19.2/CSA B45.0/CSA B45.1

FEATURES

Performance
Sloan's toilet tank system incorporates a high performance flapper flush valve to ensure an efficient and optimum flushing performance. 3" valve opening offers better waste removal and powerfully clears the bowl.

Colors and Accessories
Available in the color White with polished chrome left or right trip handle. For additional information refer to our price book.

Functional
The tank valve provides a 1.28 gpf low consumption flush. Durable construction provides non-corrosive dependability. Anti-siphon ballcock allows reliable operation at high or low water pressures. Adjustment screw allows water level adjustment for individual preference.

Economical
High Efficiency Toilet tank system provides additional savings in water usage. Reduces maintenance and operation costs. Designed for commercial use and also ideal for residential.

Warranty
3 year (limited)

Product Specification

Elongated toilet tank system shall be made of vitreous china. Toilet tank system shall be installed at required height of 29" from floor to top of tank fixture.Toilet tank system shall be floor mounted. Toilet tank system shall include floor mount bolts and caps. Toilet tank system shall be a high efficiency 1.28 gpf. Toilet tank system shall be Sloan model WETS-9000.9010-1.28 (left handle) or Sloan model WETS-9000.9110-1.28 (right handle).

U.S. GREEN BUILDING COUNCIL MEMBER

UPC C ®

Listed by I.A.P.M.O.

This space for Architect/Engineer approval

Job Name _____ Date _____

Model Specified _____ Quantity _____

Variations Specified _____

Customer/Wholesaler _____

Contractor _____

Architect _____

The information contained in this document is subject to change without notice.

SLOAN®
Sloan Valve Company
10500 Seymour Avenue
Franklin Park, IL 60131
Phone: 1-800-9-VALVE-9 (982-5839)
or 1-847-671-4300
Fax: 1-800-447-8329
or 1-847-671-4380
www.sloanvalve.com

Copyright © 2010 Sloan Valve Company
Rev. 0b (07/10)

Gravity Series

Model

WETS 9000-1.28

Two Piece Floor Mounted Elongated Toilet Tank System

DESCRIPTION

Complete two piece vitreous china, elongated, floor mounted toilet tank system.

Flush Cycle

☐Model WETS-9000.9010-1.28 gpf/4.8 Lpf (Left Handle)
- ST-9000-A 1.28 Bowl
- ST-9010-A 1.28 Left Handle Tank

☐Model WETS-9000.9110-1.28 gpf/4.8 Lpf (Right Handle)
- ST-9000-A 1.28 Bowl
- ST-9110-A 1.28 Right Handle Tank

DIMENSIONS/ROUGH-IN

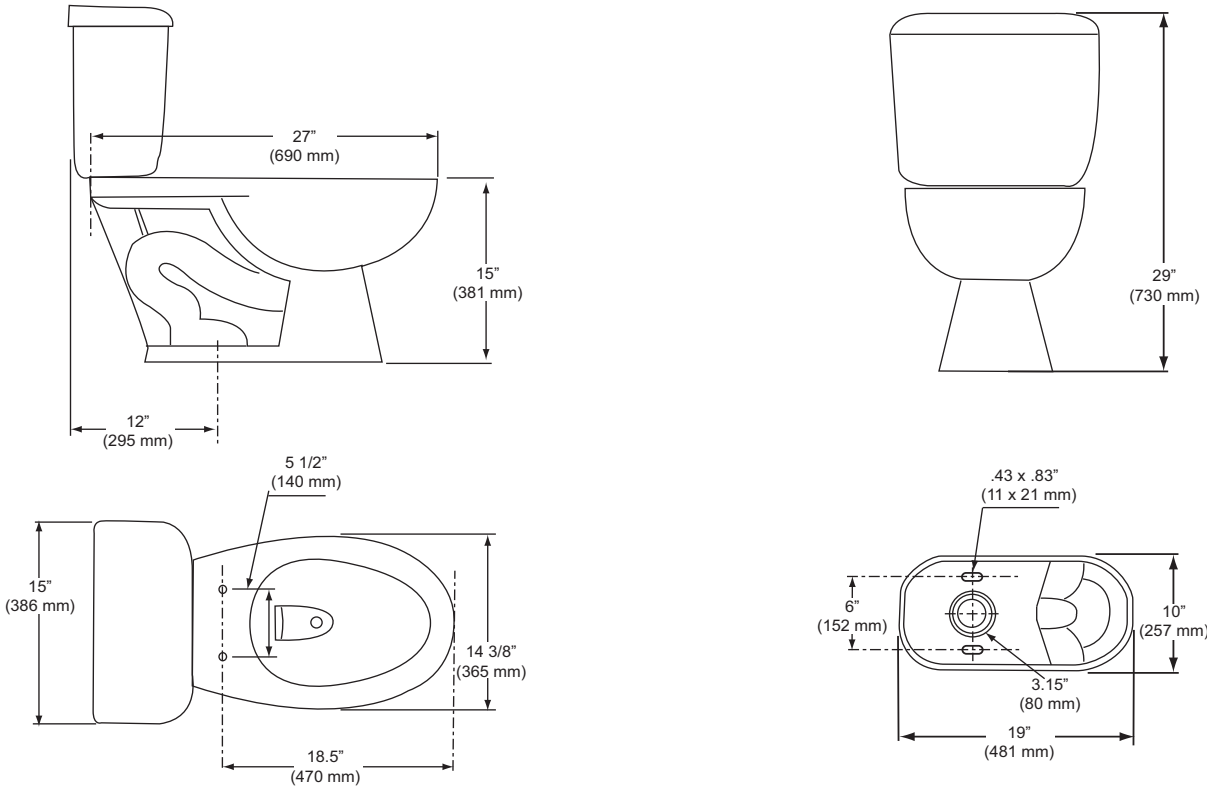

SLOAN VALVE COMPANY • 10500 SEYMOUR AVENUE • FRANKLIN PARK, IL 60131
Phone: 1-800-9-VALVE-9 or 1-847-671-4300 • Fax: 1-800-447-8329 or 1-847-671-4380 • www.sloanvalve.com

Copyright © 2010 Sloan Valve Company

DELTA CONSULTING & ENGINEERING
OF ST. HELENA

Appendix B

DELTA CONSULTING & ENGINEERING
OF ST. HELENA

1405 Adams Street
Estimated Drip-Irrigation Water Usage for Landscaping

PROPOSED WATER USAGE ANALYSIS

Landscaping Watering Requirements

	Jun - Sep	Mar - May, Oct	Nov - Feb	
Irrigation Days/Wk	4	2	0	
Hours/Irrigation Day	0.167	0.167	0.167	←10 minutes / day
Irrigation hours/month	3	1	0	
Irrigation hours (annual total)	17	hrs		
Emitter Spacing	4	ft		
Emmitter Lateral Influence	4	ft		
Area per Emitter	16	sf		
Emitter Flow Rate (gph)	1	gph		

Calculations - Landscaping Areas

	Area (sf)	Area with Drip Irrigation (sf)	Number of Drip Emmiters	Irrigation Hours (annual total)	Total Daily Flow (gpd)	Total Annual Flow (gal)
Existing Landscaping	2,500	2,500	156	17.3	7.4	2,708

1104 ADAMS STREET, SUITE 203 – ST. HELENA, CALIFORNIA 94574
707-963-8456 TELE + 707-963-8528 FAX

DELTA CONSULTING & ENGINEERING
OF ST. HELENA

Appendix C

DELTA CONSULTING & ENGINEERING
OF ST. HELENA

1405 Adams Street

Proposed 500 Square Foot Pool with Cover

Water Usage Due to Evaporation

	Information Source	Location
Rainfall	California Department of Water Resources	St. Helena
Pan Evaporation	Western Regional Climate Center	Warm Springs Dam, CA
Temperatures	California Department of Water Resources	Healdsburg, CA

	Precipitation		Evaporation		Average Temperatures		
Month	Avg Rainfall (in)	10-Year Rainfall[a] (in)	PAN Evaporation (in)	Lake Evaporation[b] (In)	High (ºF)	Low (ºF)	Month
Jan	7.48	10.47	1.17	0.90	58.0	37.8	Jan
Feb	6.46	9.04	1.83	1.41	62.5	40.3	Feb
Mar	4.59	6.43	3.23	2.49	66.3	41.8	Mar
Apr	2.14	3.00	5.37	4.13	73.0	44.2	Apr
May	0.84	1.18	7.83	6.03	79.2	48.0	May
Jun	0.23	0.32	9.33	7.18	85.5	52.1	Jun
Jul	0.03	0.04	10.04	7.73	89.3	53.9	Jul
Aug	0.08	0.11	8.49	6.54	88.3	53.6	Aug
Sep	0.27	0.38	6.58	5.07	85.6	51.6	Sep
Oct	1.87	2.62	4.59	3.53	77.7	47.2	Oct
Nov	4.06	5.68	2.10	1.62	65.1	41.6	Nov
Dec	6.94	9.72	1.17	0.90	58.4	36.7	Dec
	34.99	48.99	61.73	47.53	89.3	36.7	<---Max/Min Temp (ºF)
					Jul	Dec	<---Max/Min Month

Expanded Pool Area 500 sf

Water Loss Analysis

	Pool Area (sf)	Annual Evaporation (ft)	Annual Precipitation (ft)	Total Annual Water Loss (cf)	Total Uncovered Annual Water	Total Uncovered Daily Water Loss (gal)	Total Covered Daily Water Loss[1,2] (gal)
<P> Pool	500	5.14	2.92	1,114	8,334	22.83	13.70
Total	500	5.14	2.92	1,114	8,334	22.83	13.70

Pool Cover Water Savings Note

1.) Per the Department of Energy, the estimated water savings for pool evaporation is 30-50% when pool covers are used.
http://energy.gov/energysaver/articles/swimming-pool-covers

2.) This analysis assumes 40% water savings with utilization of pool cover

1104 ADAMS STREET, SUITE 203
ST. HELENA, CALIFORNIA 94574
707-963-8456 + FAX 963-8528

CITY OF ST. HELENA
PLANNING DEPARTMENT 1480 MAIN STREET- ST. HELENA, CA 94574
PLANNING COMMISSION

FEBRUARY 7, 2017

AGENDA SECTION: Public Hearing

AGENDA ITEM: 5.2 **FILE NUMBER:** PL16-019

SUBJECT: Request by John Anderson for a Use Permit in order to establish a catering operation in addition to the existing chocolate shop at an existing tenant space located at 1367 Main Street in the CB: Central Business district.

PREPARED BY: Aaron Hecock, Senior Planner

REVIEWD BY: Noah Housh, Planning Director

APPLICATION FILED: 11/2/16 **ACCEPTED ASCOMPLETE:** 01/5/17

LOCATION OF PROPERTY: 1367 Main Street

APN: 009-240-002

GENERAL PLAN/ZONING: Central Business/CB: Central Business

APPLICANT: John Anderson **PHONE:** (707) 963-8413

PROJECT DESCRIPTION
Woodhouse Chocolate currently operates as a permitted use in the existing tenant space at 1367 Main Street. The applicant proposes to add a catering component to the existing business at this location. The addition of a catering business to the existing chocolate shop will not require any change to the property or buildings as the facility already meets all requirements as a commercial kitchen and is approved by the Napa County Department of Environmental Health. The catering business would focus on barbequed meats which would require the use of portable smokers. The applicant currently owns three different models of smokers that could be used individually or in in combination as the situation requires (see attached spec sheets). The applicant proposes to place the smokers immediately outside the rear of the building in one of their three parking spaces located off of Money Way (see attached site plan). The applicant has agreed that smokers will not be located or operated behind the building from 9am to 5pm Monday through Thursday and a condition of approval has been added to this affect. As such, the smokers could be operational from Thursday at 5pm to Monday morning before 9am.

The smoking of meat typically lasts from 10 to 12 hours and will therefore typically occur overnight. An employee is required to be on-site during smoking activities in order

to monitor the smokers (a conditional of approval has been added to this effect). Mats will be placed under the smokers to catch any ash or grease produced. Smokers will be placed at least 12" from the cinder block wall to be sure that they are clear of the building overhang and the Fire Department has no concerns over the use of the smokers at the proposed location. According to the applicant, the smokers are individually insulated and do not generate enough heat to cause burns if touched.

When not in use, the smokers will be stored at a private storage facility off-site. The applicant anticipates that the catering company would be family staffed and almost exclusively utilize the same employees as Woodhouse Chocolate. It is therefore not anticipated that catering will increase the total number of employees on-site at any given time. In an effort to mitigate any parking impact resulting from when the smokers are in use, the applicant will encourage employees to carpool, ride bicycles and utilize public transportation to travel to work. In addition, the applicant has offered to donate $500 to the St. Helena Public Works Department for the purchase and installation of a bicycle rack that can be placed at the City's discretion.

ANALYSIS

CEQA

Staff finds that the project is exempt from the requirements of CEQA pursuant to Section 15301, Class 1, which exempts the operation, leasing, or minor alteration of existing facilities. The proposed project is not subject to any of the exceptions to the use of a categorical exemption as outlined in CEQA Section 15300.2. The project site is not located on or near an environmentally sensitive area, is not visible from a scenic highway, is not included on a hazardous waste site, and will not impact historic resources or otherwise generate or contribute to any potentially significant impacts.

GENERAL PLAN

The subject property has a General Plan land use designation of Central Business (CB). This designation provides for retail, personal service uses, offices, restaurants, hotels/motels, service stations, public and quasi-public uses, and similar and compatible uses that serve local residents and the surrounding area. Emphasis is on pedestrian-oriented retail and service uses on the ground floor level, with office and residential uses on the upper levels. The intent is for the CB district to remain primarily local resident-serving in character. New uses which serve both local residents and tourists are allowed. General Plan policies applicable to the proposed project include:

- **2.6.33** Provide sufficient parking to serve the needs of residents in proximity to commercial destinations.
- **2.6.35** Maintain the Central Business District as the City's social and cultural core and the primary center for retail business.
- **2.6.38** Encourage primarily local serving businesses in the CB and SC designated areas.

- **3.4.2** Support the development of a responsible visitor-serving component to the City's economy as a valuable source of jobs, tax revenues, and cultural amenities.

ZONING

Consistent with the Central Business land use designation in the General Plan, the site exhibits a zoning designation of CB: Central Business. This designation provides for retail, personal service uses, offices, restaurants, hotels/motels and other similar and compatible uses. The intent is for the CB district to remain primarily locally serving in character. New uses which serve both local residents and tourists are allowed; however; uses which are primarily tourist-serving are not permitted. Local serving businesses are considered to be those that derive a significant portion of their revenue from St. Helena residents, and which provide services and products which satisfy local resident's day to day needs. It is presumed that the "local" customer base is defined by regular repeat customers from the community.

Pursuant to Municipal Code Section 17.48.020, the existing confectionery shop is a permitted use in the CB district. However, Municipal Code Section 17.48.030 requires that catering establishments obtain approval of a Use Permit in the CB district. Therefore, the applicant is required to obtain a Use Permit in order to allow for the addition of a catering business to the established chocolate shop.

Use Permit

The purpose of a use permit is to allow the proper integration of essential or desirable uses which may be suitable only in certain locations or zoning districts in the City, or to ensure that such uses are designed or arranged on the site in a particular manner. In its review of applications for use permits, the Planning Commission shall evaluate each proposed use in order to consider its impact on the City. Pursuant to Municipal Code Section 17.168 050, no use permit shall be granted unless the following findings can be made:

1. That the proposed use would not generate odors, fumes, dust, light, glare, radiation or refuse that would be injurious to surrounding uses or to the community.
2. That the proposed use would not generate levels of noise that adversely affect the health, safety, or welfare of neighboring properties or uses.
3. That the proposed use would not generate traffic noise in excess of the "normally acceptable" range identified in the General Plan.
4. That the proposed use would not make excessive demands on the provision of public services including water supply, sewer capacity, energy supply, communication facilities, police protection, and fire protection.
5. That the proposed use would provide adequate ingress and egress to and from the proposed location.
6. That allowing the proposed use would not conflict with the City's goal of maintaining the economic viability of a local serving economy.

7. That the proposed use would be compatible with surrounding land uses and would not conflict with the purpose established for the district within which it would be located.
8. That the proposed use would not be in conflict with the City's General Plan.
9. That the proposed use would not be injurious to public health, safety, or welfare.
10. That granting the use permit would not set a precedent for the approval of similar uses whose incremental effect would be detrimental to the City or would be in conflict with the General Plan.
11. That, as demonstrated on a detailed plan submitted by the applicant, adequate off-street parking to accommodate the long term parking needs of employees and business owners and customers is available.
12. That the capacity of surrounding streets is adequate to serve the automobile and delivery truck traffic generated by the proposed use.

Staff Response: Staff finds that the project meets and/or complies with the required findings to approve a Use Permit as identified above. The findings included in the attached resolution identify this compliance.

PARKING
The applicant's tenant space is within the City's parking impact overlay district. The purpose of the parking impact overlay district is to establish parking standards for portions of the City generally located within the central business district. This area of the City is impacted by a lack of off-street parking because the buildings are of historic and unique character and were constructed in the early history of the City when automobiles were not as common. Within the parking impact overlay district, the basic parking requirement for buildings existing as of February 1, 1980 is one space for each 1,200-sf of floor area. Therefore, the existing 2,600 tenant space is required to have two dedicated parking spaces. As previously noted, the existing tenant space currently has three dedicated parking spaces at the rear of the building off Money Wary. The applicant is not proposing an addition to the building and there will be no change or increase in the occupancy. Therefore, the project as proposed does not meet the criteria which would require additional off-street parking.

SIGNAGE
The applicant is not proposing any new or modified signage at this time.

CORRESPONDENCE
As of the completion of this report staff had received no correspondence related to this application.

ISSUES
Parking
As detailed in the parking analysis above, the existing tenant space is required to have two dedicated parking spaces and currently has three. Therefore, even when the smokers are in use and occupying one of the buildings three dedicated spaces, it will

still provide the required number of parking spaces. While staff has concerns about the loss of a parking space during smoker operation, a condition of approval has been added requiring that the smokers not be located or operated behind the building from 9am to 5pm Monday through Thursday in order to minimize parking impacts.

Smoking Hours
As previously discussed, a condition of approval has been added that smokers will not be located or operated behind the building from 9am to 5pm Monday through Thursday. As such, the potential exists for the smokers to be operational during the weekend which could result in smoke and odor impacting the surrounding area. The applicant has indicated that the smokers produce a minimal amount of smoke, however, staff has no knowledge of the actual amount of smoke produced. While it is not anticipated that significant impacts will occur, the Commission may want to revisit the use permit in 6 months to ensure no impacts are occurring.

STAFF RECOMMENDATION
Staff feels the addition of a catering business to the existing chocolate shop will have minimal impact to surrounding businesses as it won't be an everyday use, will largely occur overnight, won't require the hiring of any additional staff, and will use the existing commercial kitchen. Therefore, staff recommends that the Planning Commission:

1. Determine that the project is exempt from the requirements of CEQA pursuant to Section 15301, Class 1, which exempts the operation, leasing, or minor alteration of existing facilities.
2. Accept the required findings and approve the Use Permit for 1367 Main Street.

ATTACHMENTS
1. Resolution / Conditions of Approval
2. Applicant Statement
3. Site Plan and Photos
4. Smoker Spec Sheets

CITY OF ST. HELENA, STATE OF CALIFORNIA
USE PERMIT NO. PL16-
GRANTED TO 1367 MAIN STREET

PROPERY OWNER: James Thorsen, H.J. Thornsen Trust **APN:** 009-240-002

RECITALS

1. The applicant requests a Use Permit in order to establish a catering operation in addition to the existing chocolate shop at an existing tenant space located at 1367 Main Street in the CB: Central Business district.
2. The Planning Commission of the City of St. Helena, State of California, held a duly noticed public hearing on February 7, 2017.

RESOLUTION

The Planning Commission of the City of St. Helena, State of California, approved the Use Permit on the following basis:

A. In making the findings in this Resolution, the Planning Commission relied upon and hereby incorporates by reference all of the documents referenced in this Resolution and the associated staff reports, City files for this matter, correspondence, presentations and other materials.

B. The Planning Commission hereby finds that this project is exempt from the requirements of CEQA pursuant to Section 15301, Class 1, which exempts the operation, leasing, or minor alteration of existing facilities.

C. In accordance with Municipal Code Section 17.168.050, the Planning Commission makes the following use permit findings to support the motion to approve the use permit:

   1. *That the proposed use would not generate odors, fumes, dust, light, glare, radiation or refuse that would be injurious to surrounding uses or to the community in that the meat smokers produce very little actual smoke and any odors emitted are not injurious.*
   2. *That the proposed use would not generate levels of noise that adversely affect the health, safety, or welfare of neighboring properties or uses in that the smokes do not create noise.*
   3. *That the proposed use would not generate traffic noise in excess of the "normally acceptable" range identified in the General Plan in that the smokers are stationary and will not generate traffic.*
   4. *That the proposed use would not make excessive demands on the provision of public services including water supply, sewer capacity, energy supply, communication facilities, police protection, and fire protection in that the proposed uses will have no effect on these services.*
   5. *That the proposed use would provide adequate ingress and egress to and from the proposed location in that will not affect ingress and egress from the location.*

6. *That allowing the proposed use would not conflict with the City's goal of maintaining the economic viability of a local serving economy in that this is a supplemental use to existing business.*
7. *That the proposed use would be compatible with surrounding land uses and would not conflict with the purpose established for the district within which it would be located in that this is a supplement use to an existing business.*
8. *That the proposed use would not be in conflict with the City's General Plan in that it is both local and tourist serving.*
9. *That the proposed use would not be injurious to public health, safety, or welfare in that the smokers produce minimal smoke and heat and will be located off-site when not in use.*
10. *That granting the use permit would not set a precedent for the approval of similar uses whose incremental effect would be detrimental to the City or would be in conflict with the General Plan in that this use permit only applies to this property and to this specific use.*
11. *That, as demonstrated on a detailed plan submitted by the applicant, adequate off-street parking to accommodate the long term parking needs of employees and business owners and customers is available in that the project's ability to meet required parking is discussed in the staff report.*
12. *That the capacity of surrounding streets is adequate to serve the automobile and delivery truck traffic generated by the proposed use in that the project will generate very little traffic and can adequately be served by existing streets.*

Planning Department Conditions of Approval

D. The Use Permit for the above described use is granted subject to compliance with the following conditions. The Use Permit shall be in conformance with all City ordinances, rules, regulations and policies in effect at the time of issuance of a building permit. The conditions noted below are particularly pertinent to this permit and shall not be construed to permit violation of other laws and policies not so listed.

1. The Use Permit shall be vested within one (1) year from the date of approval. The permit may be extended for up to two (2) one-year periods pursuant to the St. Helena Municipal Code, Section 17.08.130, Extension of Permits and Approvals. Any request for an extension must be justified in writing and received by the Planning Department at least thirty (30) days prior to expiration.

2. This permit is valid for this use only. New permits must be applied for upon any change in use. This permit will expire if the use is discontinued pursuant to then existing ordinances and regulations.

3. The permit shall not become effective until fourteen (14) calendar days after approval, providing that the action is not appealed to the City Council within that 14 day period.

4. All required fees, including planning fees, development fees, housing fees, building fees toilet retrofit fees, and St. Helena Unified School District fees shall be paid prior to issuance of building permit. Fees shall be those in effect at the time of the issuance of the building permit.

5. Compliance with all permit conditions shall occur in accordance with specific regulations but in all cases no later than prior to occupancy or initiation of use unless another time is set by law or by this approval. Occupancy or final inspection of a

project may be withheld if all conditions, including payment of fees for services rendered by the City, are not met.

6. In any action or proceeding to attack, challenge, invalidate, set aside, void or annul the City's approval of applicant's project, in whole or in part, applicant shall defend, at its own expense and without any cost to the City, and with counsel acceptable to the City, and shall fully and completely indemnify and hold the City, its agents, officers, and employees harmless from and against any and all claims, causes of action, damages, costs, attorney's fees and liability of any kind, so long as the City reasonably promptly notifies the applicant of any such claim, action, or proceedings and the City cooperates fully in the defense of the action or proceedings.

7. Provided they are in general compliance with the permit, minor modifications may be approved by the Planning Director.

8. This permit shall run with the land and shall be binding upon all parties having any right, title or interest in the real property or any part thereof, their heirs, successors and assigns, and shall inure to their benefit and benefit of the City of St. Helena.

9. The primary purpose of this review is for compliance with the General Plan and Zoning Ordinance. The owner/applicant is responsible for meeting with the Building Official/Fire Inspector to review compliance with Building and Fire Codes, including fire protection systems and the accessibility standards of Title 24.

10. Fire equipment shall be inspected annually by the Fire Department.

11. Smokers shall not be located or operated behind the building from 9am to 5pm Monday through Thursday.

12. An employee shall be on-site during all smoking activities in order to monitor the smokers.

13. To reduce disturbance of residents in the project vicinity, construction activities which generate noise that can be heard at the property line of any parcel of real property within the City limits shall be limited to 8:00 a.m. to 5:00 p.m. Monday through Saturday. Delivery of materials/equipment and cleaning and servicing of machines/equipment shall be limited to 7:00 a.m. to 6:00 p.m. Exceptions to these time restrictions may be granted by the Public Works Director for one of the following reasons: (1) inclement weather affecting work, (2) emergency work, or (3) other work, if work and equipment will not create noise that may be unreasonably offensive to neighbors as to constitute a nuisance. The City Engineer must be notified and give approval in advance of such work. No construction activities shall occur on Sundays or federal or local holidays that generate noise that can be heard at the property line of any parcel of real property within the City limits.

Public Works Department Conditions of Approval

14. The applicant shall provide a preliminary plan for the proposed bike rack(s) and shall work with the Public Works Department in verifying acceptable bike rack locations on Main Street.

15. Approval of this project shall be subject to the requirements of, and all improvements shall be designed and constructed in accordance with, the most current version at the time of improvement plan submittal, Caltrans Standards and

Specifications, the City of St. Helena Municipal Code, the St. Helena Water and Sewer Standards, the St. Helena Street, Storm Drain and Sidewalk Standards, and all current federal, state and county codes governing such improvements.

16. For any improvements outside the existing building envelope, a grading and drainage plan showing topographic data, all easements, infrastructure onsite and directly adjoining, and an erosion control plan shall be submitted for review and approval by the City Engineer prior to the issuance of a building permit. If the project entails more than 50 cubic yards of soil disturbance, 10,000 square feet of disturbance area, a cut or fill of 3 feet or more, or alteration of any drainage pattern, a grading permit shall be required.
17. The applicant shall repair all public improvements that are damaged by the construction process in accordance with the City Water/Sewer/Street/Storm Drain/Sidewalk Standards prior to Certificate of Occupancy.
18. Existing streets being cut by new utility services will require edge grinding and an A.C. overlay per City standards, extent to be determined by the Public Works Department.
19. An encroachment permit shall be required for any work performed in the public right of way.

Building Department Conditions of Approval

20. The applicant will be required to comply with the codes adopted at the time the applicant applies for a building permit. At this time the City of St. Helena utilizes the 2013 Title 24 codes.
21. When submitting plans for a building permit, the plans shall include all documentation listed on the building permit application checklist.
22. The applicant shall provide a construction waste management plan with the building permit application.
23. The plans for construction shall include a checklist for compliance with the California Green Buildings Standards Code, mandatory measures. Provide a reference on the checklist indicating where the mandatory measures can be found on the plans.
24. When submitting plans, the title page shall include all information referenced on the building permit application checklist Title Page requirements.
25. Building Permit application materials and plans shall include any documentation pertaining to special loads applicable to the design and the specified section of the code that addresses the condition; special inspections for any systems or components requiring special inspection; requirements for seismic resistance; and a complete list of deferred submittals at time of application. Any deferral of the required submittal items shall have prior approval of the Building Official however deferral of fire sprinkler design is not allowed.

I HEREBY CERTIFY that the foregoing Use Permit Amendment was duly and regularly approved by the Planning Commission of the City of St. Helena at a regular meeting of said Planning Commission held on February 7, 2017 by the following roll call vote:

AYES:
NOES:
ABSENT:
ABSTAIN:

APPROVED:	ATTEST:
_____	_____
Grace Kistner Chair, Planning Commission	Noah Housh Planning Director

Written Statement

Woodhouse Chocolate currently operates as an approved use in the General Plan, i.e. Chocolate Shop/Confectionary. We propose to add Catering as a permitted use at our facility. The added use will not require any change to the property or buildings as the facility already meets all requirements as a commercial kitchen and is approved by Napa County Environmental Health. Our catering will concentrate on BBQ so the only noticeable change at the physical plant will be when our smokers are in operation. They must operate out of doors and so will be placed immediately outside our building, on Money Way (see drawings).

All food preparation will take place inside the building with the exception of the smoking of the meat which must take place outside. The potential impact of the smokers on the public or adjacent businesses will be minimal. They will operate during the nighttime hours and will be removed to Storage Pro, 829 St. Helena Hwy S, St. Helena, CA 94574 when not in use. Smokers will not be present from 9am to 5pm Monday through Thursday. It should also be noted that even though they are named “smokers” they actually produce far less actual smoke than a traditional, kettle barbecue. We currently own three different models of smokers that could be used individually or in in combination as the situation requires. They are as follows (individual specifications sheets attached):

- One - Backwoods Smoker “Chubby”
- Three - Backwoods Smoker “Fatboy”
- One - Backwoods Smoker “Pro Competition Hog”

Like Woodhouse Chocolate, our catering company will be family staffed and almost exclusively utilize the same employees as Woodhouse Chocolate. It is therefore not anticipated that catering will increase the total number of employees.

The rear of Woodhouse Chocolate on Money Lane has space for two sub-compact cars and one full sized vehicle. When smokers are in use, they will occupy one of the sub-compact spaces (see drawing) and will be within a temporary barrier to separate them from the public. In an effort to mitigate any parking impact, Woodhouse will encourage employees to carpool, ride bicycles and utilize public transportation to travel to work. Further, Woodhouse will donate $500 to the St. Helena Public Works Department for the purchase and installation of bicycle rack that can be placed at the Town’s discretion.

To eliminate any direct physical impact, mats will be placed under the smokers to catch any of the small amount of ash and grease produced. Smokers will be placed at least 12” from the cinder block wall to be sure that they are clear of the building overhang. Storm water will not be effected as mats are washed inside the building. There are no BAAQMD regulations involved as caterers are categorically exempt.

Woodhouse Barbecue will directly benefit the community by bringing a greater choice to catering in the area as well as adding to the local tax base through the collection of sales tax.

WOODHOUSE BBQ
SMOKER PLACEMENT

1367 MONEY WAY

SCALE 1/4" =1'-0"

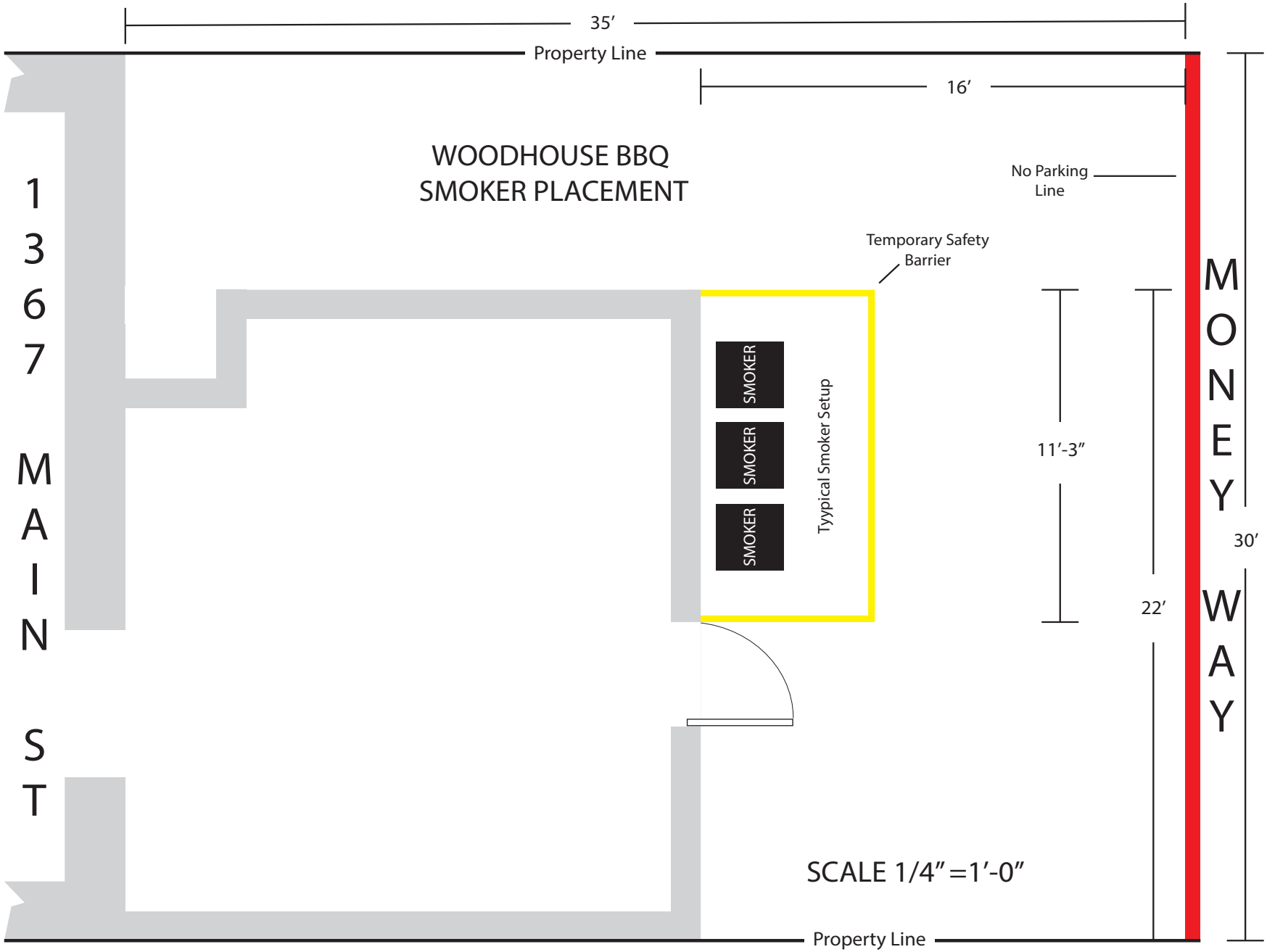
35′
Property Line
16′
WOODHOUSE BBQ
SMOKER PLACEMENT
No Parking
Line
Temporary Safety
Barrier
1367 MAIN ST
SMOKER
SMOKER
SMOKER
Tyypical Smoker Setup
11′-3″
22′
30′
MONEY WAY
SCALE 1/4″=1′-0″
Property Line

1367 MAIN STREET

1367 MONEY WAY

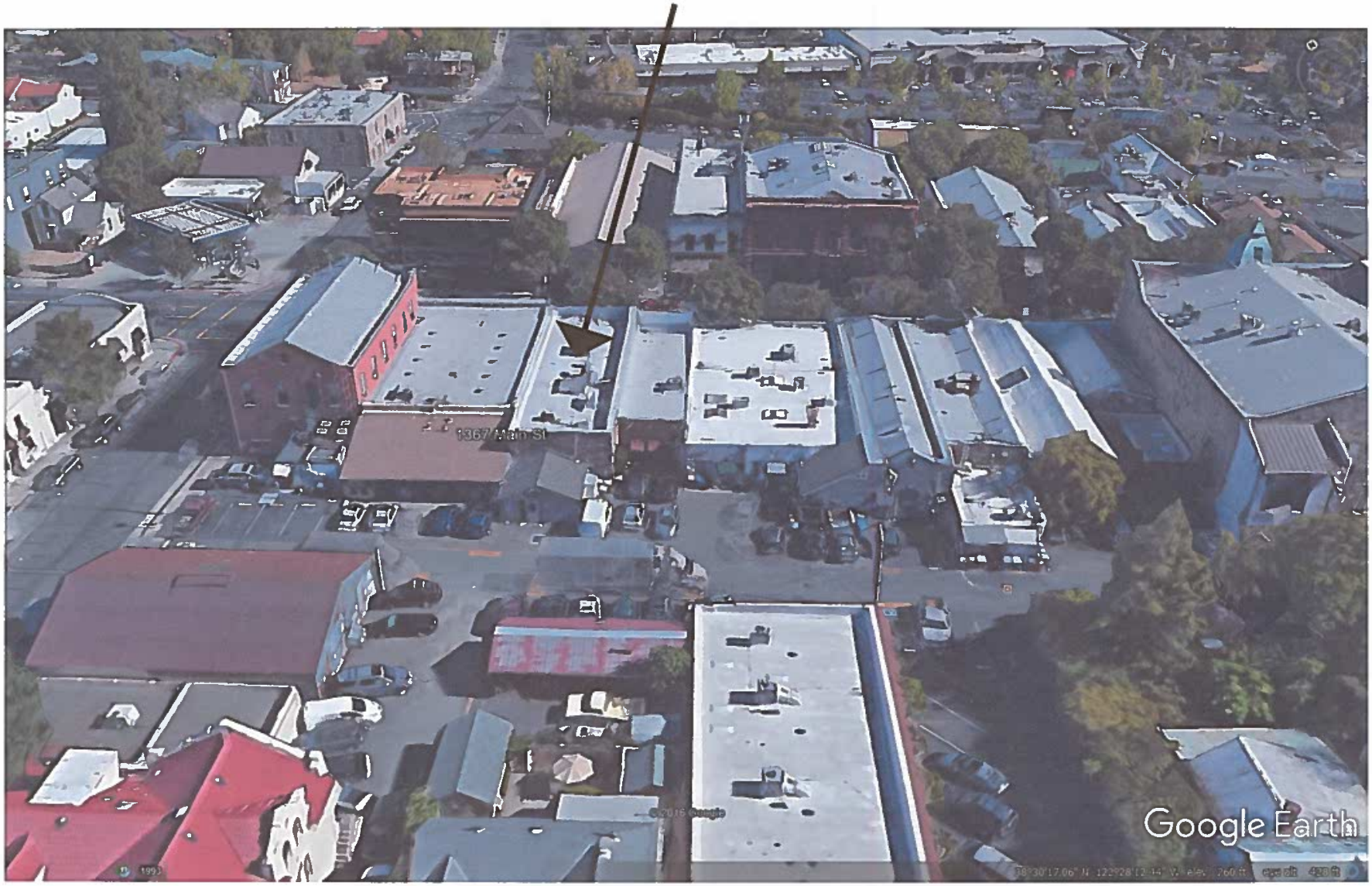

BACKWOODS SMOKER

Founded 1987

8245 Dixie Shreveport Rd
Shreveport, LA 71107

OFFICE: (318) 220-0380
FAX: (318) 220-9022

Chubby

As our smallest and most portable Backwoods Cooker, the Chubby also serves as one of our most versatile offerings in our cooker lineup. The Backwoods Smoker Chubby can easily be converted into a grill or a BBQ pit by simply removing the stainless water pan.

The Chubby weighs in at a hefty 130 lbs.

Dimensions:

Outside dimensions:

- 20″ deep plus 2 ½″ for the thermometer and door latches
- 29″ tall plus 2″ for the stack
- 20″ wide

Cooking Chamber dimensions:

- 17″ deep
- 13″ tall cooking chamber
- 16″ wide

Racks:

- Four, 3″ apart
- 16 ½" deep
- 15 ½" wide
- 1/8″ Nickel plated round bar

Standard Features:

- Removable water pan
- Black doors with slam latches
- 1 extra slider for rack height adjustment
- Pre-drilled Caster bolt hole pattern on bottom of the 3 inch feet
- 1/8″ nickel plated racks
- Cooking degrees: (approx) 180 to 300
- Amount of charcoal: (approx) 6 to 10 lb
- Cooking time: (approx) 6 to 10 hours *{Depending on the temperature used for cooking}*

Meat: (approx)

- 8 slabs of baby back ribs
- 2 to 3 briskets
- 2 to 4 Boston butts

Pricing:

Base Price: $1,030

- Heat diverter: $50
- Stainless Steel Doors: $235
- 2″ Insulations: $255
- Castors: $213 *{they will raise the smoker up 6″}*
- Permanent Stand: $175 *{This will be welded to the bottom of the smoker in place of the three inch feet}*
- Removable Stand: $320 *{This will be bolted to the existing bolt hole pattern on the bottom of the feet}*

  NOTE: We prefer not to go over a total of 16 inches in total height on the bottom of the smoker.

- Cover: $70
- Tie down handles: $85 *{1″ d-rings for your ratchet straps}*
- BBQ Guru Digi Q DX 2: $275 *{this includes the adapter door and the 10 cfm fan}*

BACKWOODS SMOKER

Founded 1987

8245 Dixie Shreveport Rd
Shreveport, LA 71107

OFFICE: (318) 220-0380
FAX: (318) 220-9022

The Fatboy

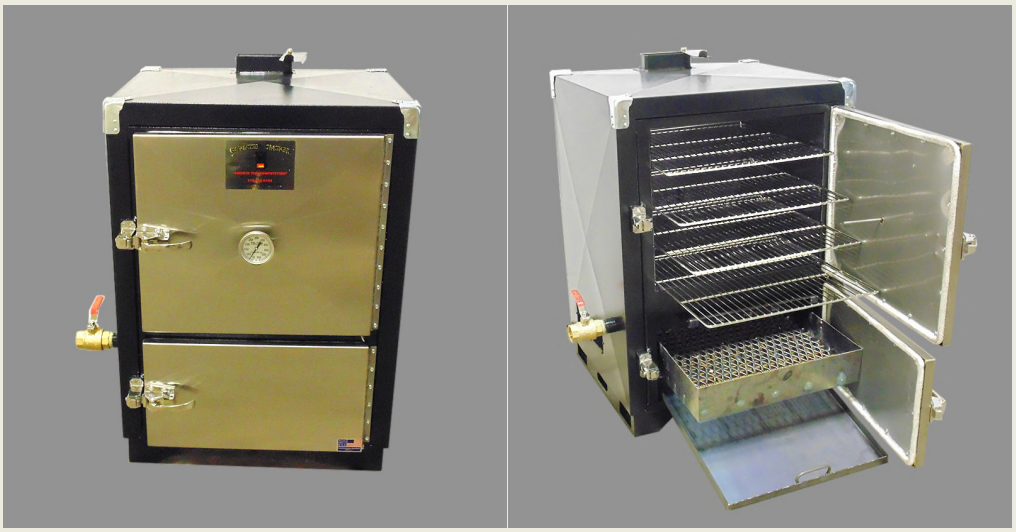

This is the cooker that won the Jack Daniels Championship in 2007. The winner of that contest used ONE Fatboy for all 4 KCBS Categories.

The Fatboy follows the tradition of the Backwoods Smoker line, being a versatile cooker that can be easily transported for competition and catering. The Fatboy has a commercial fire pan which allows the ash to fall into the catch pan below it. The Fatboy has four racks 19 1/2″ square which are spaced 4 1/4″ apart. Its external dimensions are 27″ x 38″ x 24″. It has an excellent capacity and will deliver competition level performance.

The weight of a Fatboy unit is 275 lbs.

Dimensions:

Outside dimensions:

- 25″ deep plus 2 1/2″ for the thermometer and latches
- 38″ tall plus 2 1/2″ for stack
- 27″ wide plus 8″ for the drain

Cooking Chamber dimensions:

- 20″ deep
- 20 1/2″ tall
- 20″ wide

Racks:

- Four, 4″ apart
- 19 1/2″ deep
- 19 ½”wide
- 1/4″nickel plated round bar

Standard Features:

- Permanent water pan
- Stainless steel doors
- Commercial fire grate
- 2″ insulation
- Pre-drilled Caster bolt hole pattern on the bottom of the 3 inch feet
- Cooking degrees: (approx) 180 to 300
- Amount of charcoal: (approx) 12 to 18 lb
- Cooking time: (approx) 6 to 10 hours {Depending on the temperature used for cooking}

Meat: (approx)

- 8 to 10 slabs of baby back ribs
- 8 briskets
- 12 to 16 Boston butts

Pricing:

Base Price: $2,295

- Heat diverter: $65
- Auto Water: $810
- Castors: $213 *{they will raise the smoker up 6″}*
- Permanent Stand: $175
  {This will be welded to the bottom of the smoker in place of the three inch feet}
- Removable Stand: $320
  {This will be bolted to the existing bolt hole pattern on the bottom of the feet}

  NOTE: We prefer not to go over a total of 16 inches in total height on the bottom of the smoker.

- Cover: $90
- Racks: $55 *{Additional racks can be added}*
- Sliders: $35 *{Additional sliders can be added, these are what your racks rest on and slide in and out on}*
- BBQ Guru Digi Q DX 2: $275 *{this includes the adapter door and the 10 cfm fan}*

NEW! Optional Feature:

- **Pellet Feed:** $400
  Includes digital controller, internal meat probe and smoke box. Hopper holds approx. 20 lbs.
  Cooking temperatures: 225-250 degrees (approx.)
  Cooking time: 18-24 hours (approx.)

BACKWOODS SMOKER

Founded 1987

8245 Dixie Shreveport Rd
Shreveport, LA 71107

OFFICE: (318) 220-0380
FAX: (318) 220-9022

The Pro Competition Hog

The Pro Competition Hog is for the teams and chefs that want to be the Professional hog cooks. This smoker is 6 inches deeper and 6 inches wider than our Competition Hog Smoker (Comp Hog.) You can cook up to approximately 240 to 260 lb. hogs, depending on how they are prepared. Extra racks can be added to double – or even triple – the amount of ribs, brisket and chicken that can be cooked on this smoker.

The weight of a Pro Competition Hog unit is 980 lbs.

Dimensions:

Outside dimensions:

- 39 1/2″ deep plus 2 1/2″ for the thermometer and latches
- 50″ tall plus 3 1/2″ for stack
- 70″ wide

Cooking Chamber dimensions:

- 34″ deep
- 24″ tall
- 58″ wide

Racks:

- 1 rack, 1 carousel
- 33″ deep
- 57″ wide
- Expanding metal rack

Standard Features:

- Permanent water pan
- Stainless steel doors
- 2″ insulation
- Heat diverter
- Pre-drilled Caster bolt hole pattern on the bottom of the 3 inch feet
- Cooking degrees: (approx) 180 to 300
- Amount of charcoal: (approx) 25 to 35 lb
- Cooking time: (approx) 6 to 10 hours *{Depending on the temperature used for cooking}*

Meat: (approx)

- 44 slabs of baby back ribs
- 28 to 32 briskets
- 75 to 85 Boston butts
- Up to 260 lb whole hog

Pricing:

Base Price: $7,845

- Auto Water: $810
- Auto Gas: $3,080
- Convection: $2,955
- Castors: $396 *{they will raise the smoker up 6″}*
- Permanent Stand: $175 *{This will be welded to the bottom of the smoker in place of the three inch feet}*
- Removable Stand: $320 *{This will be bolted to the existing bolt hole pattern on the bottom of the feet}*

  NOTE: We prefer not to go over a total of 16 inches in total height on the bottom of the smoker.

- Racks: $235 *{additional racks can be added}*
- Carousels: $445 *{up to 3 additional carousels can be added}*
- Sliders: $45 *{additional sliders can be added, these are what your racks rest on and slide in and out on}*
- Tie down handles: $85 *{1″ d-rings for your ratchet straps}*
- BBQ Guru Digi Q DX 2: $275 *{this includes the adapter door and the 10 cfm fan}*

Tentative Planning Commission Agenda
Updated: February 2, 2016

CURRENT AND PENDING MATTERS

February PC and/ or CC Agenda:
1. PL16-086 1367 Main St Woodhouse Bar-B-Q Use Permit –Aaron Hecock
2. PL16-084 1425 Oak Ave DR Playground Shade at Montessori Pre School-Noah Housh
3. 1045 Pratt-DR for new SFD-Lilly Bianco
4. PL16-080 1405 Adams St New SFD w/ Attached Garage –Lilly Bianco
5. 1105 Turley Flats Affordability and Loan Agreements- CC Approved Jan. 31, 2017
6. PL16-099 1475 Main Rianda House New Sign-Aaron Hecock
7. PL16-079 1225 Allyn Ave SFD with Attached Garage -Lilly Bianco
8. CIA Mitigated Negative Declaration Posting-Comment Period Closed Jan. 23, 2017 - Lilly Bianco
9. PL16-042 2555 Main St CIA DR, Variance and CUP for Educational Expansion-PC Review date Feb 21, 2017-Lilly Bianco
10. PL16-043 830 Pratt Ave CIA DR, Variance and CUP for Dormitory Expansion-PC Review date Feb 21, 2017-Lilly Bianco
Active/Pending Projects
1. TSM 2010-40 Vacant Parcel-2010-40 Hunter Subdivision and EIR-Noah Housh
2. PL14-041 741 McCorkle-Tentative Map and Use Permit-Under Review-Aaron Hecock
3. PL15-049 837 Signorelli Cir-Garage-DR Exemption-Pending Resubmittal-Aaron Hecock
4. PL16-025 661 Main St LLA-Frozen by Applicant-Noah Housh
5. PL16-018 & -094 420 Lafata (Previously 890 Dowdell Ln)-Custom Crush Facility-UP and Design Review- Resubmittal Under Review-Noah Housh
6. PL16-048 576 Pope St-DR for new SFD-Frozen by Applicant
7. PL14-10 1701 Madrona-Final Map and Tentative Map Extension-Frozen by Applicant
8. PL16-058 1111 Main St-DR and Master UP for Commercial Land Uses-Under Review-Aaron Hecock
9. PL16-074 Money Way Bathrooms-Aaron Hecock/Tobias Barr
10. PL16-012 633 Main St-UP to convert existing SFD into 2-room Hotel-Frozen by Applicant-Noah Housh
11. PL16-020 2555 Main/ PL16-043830 Pratt-Demo, DR, UP and Variance for CIA Campus Reno and Dorm -Under Review
12. PL16-081 thru -083 1003 Charter Oak Subdivision and 2 SFDs-Aaron Hecock
13. PL16-085 Beringer Winery Design Review-Lilly Bianco
14. PL16-089 1919 Main St Las Alcobas Signs-Aaron Hecock
15. PL16-093 2600 Sulphur Springs Admin Determination Side Setback-Noah Housh
16. PL16-095 1827 Vineyard Ave Demo and DR SFD – Aaron Hecock
17. PL16-096 800 Crane Ave DR Exemption for Equipment Install-Under Review Noah Housh

18. PL16-097-563 Main Admin Determination Oak Ave Extension Noah Housh
19. PL17-004 1380 Main # 102 Use Permit for Retail Store-Aaron Hecock
20. PL17-005 1380 Main #103 Use Permit for Retail Store-Aaron Hecock
21. PL17-006 1000 Mills Ln Farmstead Hotel-Aaron Hecock
22. PL17-007 1178 Hudson Design Review Aaron Hecock
23. PL17-009 1380 Main St Sign Permit-Under Review Aaron Hecock
24. General Plan Update EIR-In Process-Noah Housh
25. General Plan Update-In Process-Noah Housh
26. Zoning Code Update to address changes in State Law-Second Dwelling Units-In Process-Noah Housh
27. Zoning Code Update to address changes in State Law-Recreational Marijuana-In Process-Noah Housh
PC/CC Assignments Currently Under Review by Staff:
1. General Plan Update and General Plan EIR
2. Manage RFP Responses and Candidate Selection
3. Short-Term Rental Ordinance Update Implementation and Enforcement
4. Demolition Permit Review
5. Code Enforcement Policy and Procedures Update-On Going
6. PG&E Parking Lot Negotiation
Pending PC/CC Assignments for Planning Department
1. Initiate Creation and Implementation of Design Guidelines
2. Comprehensive Zoning Code Update-Following General Plan Adoption
3. F.A.R. Review-To be conducted with Zoning Code Update
4. Council Goal Setting
Other Items of Interest to Planning Commission
1. Food Truck Ordinance
2. Update Daycare Zoning Regs-Consistent with State Law
3. Pools-Drought Policy Changes. Phase 1?
4. Plan Improvements, Additional Requirements, Application Checklist
5. Limit on Demolition Permits
6. General Plan & EIR 45-day Public Review
7. Water Update/Report from PW
8. Hunter EIR 45-day Public Review and Project Review
Required Items and Issues of Interest to Staff
1. Calderon Settlement Agreement Implementation and Monitoring
2. Design Guidelines-TBD
3. PW & Planning - Ordinance to Amend Municipal Code Related to Exterior Fire

Sprinklers
5. Temporary Use Permit-Create Process-Ordinance and ZC Amendments
6. Cell Towers Ordinance-Update Current Code -State and Fed Laws
7. Growth Management Code Language Update and Annual Review (Sept)
8. Fee Study-Pending
9. Review and Comment-Draft Tree Ordinance
10. AB 52 CEQA Process Implementation-Native American Consultation-On Going
12. Code Enforcement-On Going
Recent Approvals
1. 684 McCorkle OTSH-8 Unit Affordable Multi-Family-UP, Design Review, Demo and T-Map-Under Review-Approved November 15, 2016
2. 632 McCorkle-8-Unit Multi-Family Residential-Design Review and Demolition-PC Approved 12-6-16; Appealed to CC; Appeal Denied January 24, 2017
3. Building and Fire Code Update - Ordinance to Amend Municipal Code-CC Approved Nov. 2017
4. 574 Pope St-DR, UP & T-Map-Withdrawn
5. 1105 Turley Flats Affordability and Loan Agreements- CC Approved Jan. 31, 2017
6. Design Review Submittal Requirements-PC Discussion
7. 1210 Greyson-Davies Winery Signs-PC Approved Sept. 20, 2016-Appealed to CC, Appeal Denied December 2016
8. PL16-087 1234 Adams Street Wine Tasting PC Approved 12-20-16; Appealed to CC-Appeal Supported 1-24-17, Lilly Bianco
9.
10.
11.